MAIDU GRAMMAR

BY

WILLIAM F. SHIPLEY

UNIVERSITY OF CALIFORNIA PUBLICATIONS IN LINGUISTICS
Volume 41

UNIVERSITY OF CALIFORNIA PRESS
BERKELEY AND LOS ANGELES
1964

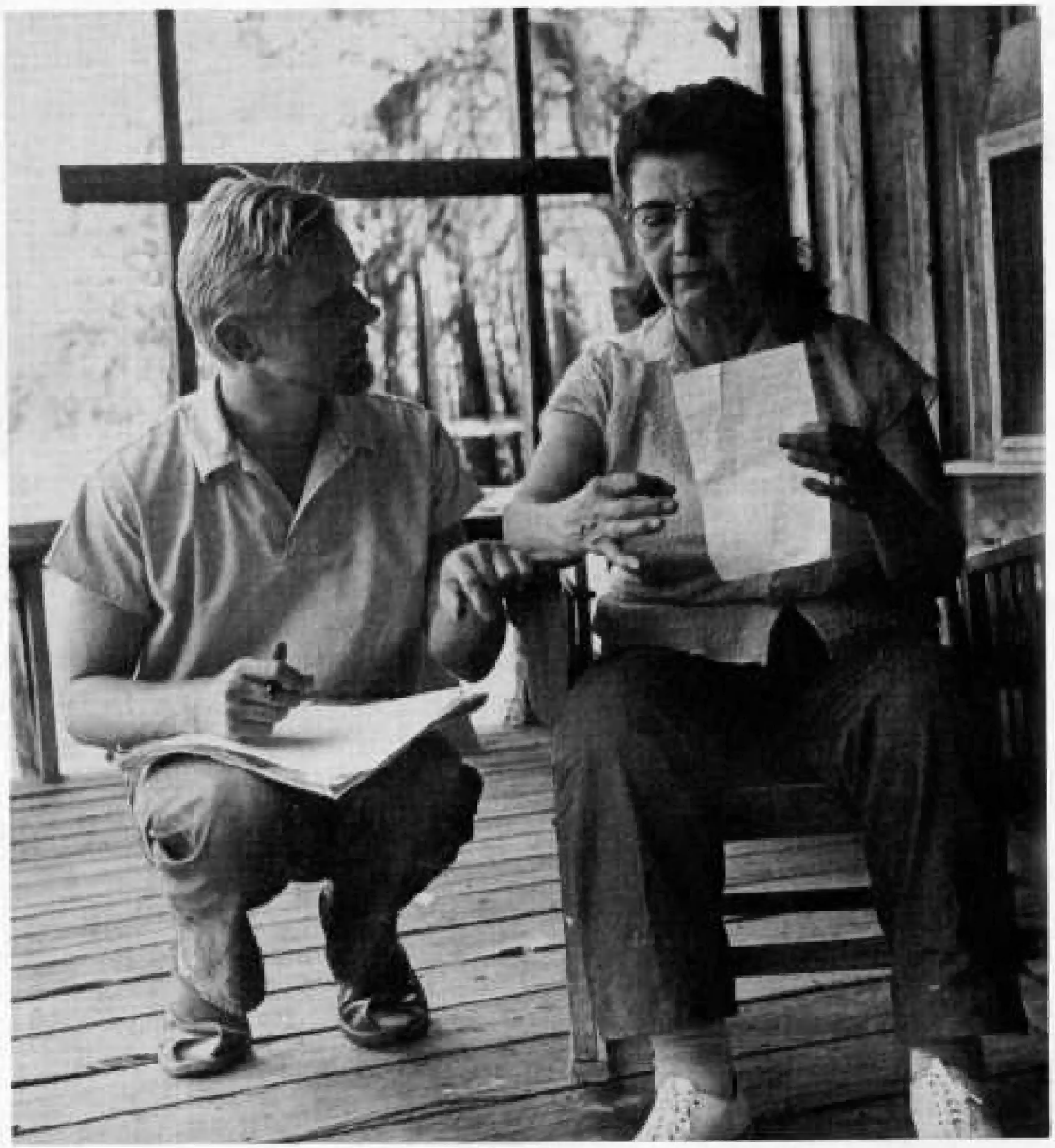

At Work With Informant

MAIDU GRAMMAR

BY
WILLIAM F. SHIPLEY

UNIVERSITY OF CALIFORNIA PRESS
BERKELEY AND LOS ANGELES
1964

UNIVERSITY OF CALIFORNIA PUBLICATIONS IN LINGUISTICS

Advisory Editors: W. E. Bull, C. D. Chrétien, M. B. Emeneau, M. R. Haas,
Harry Hoijer, D. L. Olmsted, R. P. Stockwell

Volume 41

Approved for publication August 19, 1963
Issued June 1, 1964
Price, $2.50

University of California Press
Berkeley and Los Angeles
California

Cambridge University Press
London, England

Manufactured in the United States of America

For Betsy

PREFACE

The present grammar is a revised version of that presented to the Graduate Division of the University of California, Berkeley, as a doctoral dissertation in Linguistics in 1959. Although I have effected a considerable reorganization and expansion of the original dissertation, the basic approach remains essentially the same.

In one way or another, a great many people have contributed to this work in its present form. Foremost among them, of course, is Professor Mary R. Haas, whose guidance and encouragement have been unstinting through all the eight years since I first began fieldwork with the Maidu. Even this revision for publication owes much to her unflagging stimulation of my own enthusiasm. My gratitude must also be expressed to Professor Murray B. Emeneau for his reading of an early form of the grammar. His careful, detailed comments have been of great value in later revision. I have profited greatly from conversations on theory and method with Professors Madison Beeler, Harvey Pitkin, and Jesse O. Sawyer, as well as with many wonderful students. Special mention must be made of my many talks with Professor Sydney M. Lamb, whose linguistic notions have been always stimulating, always delightful, always profitable and useful.

I am most fortunate in the possession of the beautiful photographs taken of my Maidu friends by Mrs. Nata Piaskowski, one of which appears as the frontispiece to this book.

Finally, I should like to express my special love and gratitude to Mrs. Maym Benner Gallagher, my principal informant, for all the tireless years which she has spent with me in the exploration of the Maidu language.

W. F. S.

Berkeley, California

CONTENTS

Introduction 1
Literature Cited 4
List of Symbols 5

Chapter One—Phonology

100. Phonemics 6
110. Articulation and Allophony 7
111. Consonants 7
112. Vowels 10
113. Suprasegmental Phonemes 12
200. Phonotactics 14
300. Morphophonemics 15
310. One-to-One Correlative Morphophonemes 16
320. Correlative Morphophonemes Represented by Alternative Phonemes 16
321. Primary Stress 16
322. Glottalized Stops 16
323. Vowel Sequences 16
330. Noncorrelative Morphophonemes 16
331. ‖I‖ 16
332. ‖H‖ 17
333. ‖æ‖ 17
334. ‖ɦ‖ 17
335. ‖ʼ‖ 17
336. ‖N‖ 17
337. Morphophonemes of Reduplication 17
337.1 ‖R‖ 17
337.2 ‖r‖ 17
338. ‖ˆ‖ 17
339. ‖X‖ 18

Chapter Two—Morphemics and Morphotactics

400. Introduction 19
410. Derivation 20
411. The Morph ‖j‖ 20
412. The Gerund with {ma} 'what, that which, where' 21
500. Shapes of Root Morphs 21
600. The Substantive 23
610. Nouns 23
611. Types of Stem (ST) 23
612. The Agentive {ky} 25
613. {wono} 26
620. Pronouns 26
630. The Number Suffixes 27
631. The Dual {ćo} 27
632. The Plural {cy} 28
640. The Case Suffixes 29
641. The Subject Case {Im_1} 29
642. The Object Case {I} 30
643. The Possessive Case {Iḱ} 30
644. The Locative Cases (nN1) 31
644.1 The Comitative Case {ḱan} 31
644.2 The Instrumental Case {ni} 32
644.3 The Locative Case {di} 32
644.4 The Allative Case {nak} 32
644.5 The Ablative Case {nan} 32
644.6 The Indefinite Locative {te} 33
644.7 The Linear Distributive {no} 33
650. Substantive Expansions 33
651. Demonstratives (D) 34
652. Inherent Adjectives (Ad) 34
653. Derived Adjectives (Q) 34
653.1 Derivations of Q 35
653.2 Expansions of Q 35
654. Attributives with ST (AN) 35
660. Summary of Substantive Constructions 36
700. The Verb 37
710. Verb Stems 38
711. Monomorphemic Stems 38
712. Compound Stems 38

720. The Verb Theme (VT) 40
721. The Causative Suffix {ti} 40
722. The ((ʔus)) Class 41
723. The Motion-Location Auxiliaries (MLA) 41
724. The Negative Suffix {men} 44
725. The ((bós)) Class 44
726. The ((ċój)) Class 45
730. Verb Inflection 45
731. Number and Person 45
732. The Indicative Mode 46
732.1 The Present-Past Indicative 46
732.2 The Future Indicative 47
732.3 The Habitual Past Indicative 48
732.4 The Past Punctual Indicative 48
733. The Subjunctive Mode 48
734. The Optative Mode 49
734.1 The Monitive Optative 49
734.2 The Intentive Optative 49
734.3 The Hortatory Optative 50
735. The Interrogative Mode 50
736. The Imperatives 51
736.1 Imperative I, {pi} 51
736.2 Imperative II, {padá} 51
737. {wonó} 52
738. {paʔáje} 52
739. Dependent Verb Constructions 52
739.1 The ((myni)) Class 52
739.2 The ((wet)) Class 53
739.3 {dom} '-ing' 53
740. Expansions of the Verb 53
741. Periphrasis 53
741.1 The Periphrastic Remote Past Punctual 53
741.2 The Periphrastic Subjunctive 54
741.3 Periphrasis with {syʔýj} 54
741.4 The Periphrastic Imperative, {ʔusán} {ʔasí} 54
742. Expansion by Prior Attributive 55
742.1 Adverbial Construction with {tetḗ}, 'big' 55
742.2 Adverbial Construction with {jahá}, {wasá} or ST 55
750. Summary of Verb Constructions 56

800. Minor Form-classes 56
810. Connectives (C) 57
820. Hesitation Forms (HF) 57
830. The Emphasis Marker (EM) 58
840. Absolutes 59
841. Temporal Absolutes (TA) 59
842. Adverbial Absolutes (AA) 59
850. Interjections (I) 59
860. Question Words (QW) 60
900. The Tactics of the Sentence 61
910. Tactic Expansions of S, O, and L 61
920. Tactic Expansions of V 62
930. The Clause (CL) 63
940. The Phrase (PH) 67
941. The Connective Phrase (CPH) 67
942. The Interjectory Phrase (IPH) 67
943. The General Phrase (GPH) 67
944. The Noun Phrase (NPH) 67
944.1 Noun Phrases with {webis} 67
944.2 Noun Phrases with S and {kân} 68
950. The Sentence (SEN) 68
951. The Minor Sentence 68
952. The Major Sentence 68
960. Interruptions 96

APPENDIXES

Appendix A—Text Analysis 73
Appendix B—List of Grammatical Elements 88
Appendix C—List of Classes 91

PLATE

At Work with Informant ..... Frontispiece

INTRODUCTION

The Northeastern, or Mountain, Maidu lived, in aboriginal times, in permanent villages scattered through the high, meadowy valleys of the Northern Sierra of California. The principal ones of these valleys were those now known by the names of Indian Valley, American Valley, Butt Valley, Big Meadows, and the valleys to the east toward Susanville.

The Maidu had a simple hunting and gathering economy, with acorns as the staple food as in most of Central California. Dixon described the culture in detail (Dixon, 1905); the Maidus with whom I have talked tend, in general, to corroborate his account.

In the past the name "Maidu" has been used for the Indians whose traditional homes were in a roughly rectangular area with corners at Mount Lassen, Honey Lake, Sacramento, and some point a few miles south of Lake Tahoe. This region does, indeed, include a group of languages of undoubted and close affinity. At least three distinct languages were spoken there, however. For these, the Maiduan languages, I propose these names: Maidu for what has been called "Mountain Maidu" or "Northeastern Maidu"; Konkow for what has been called "Northwestern Maidu"; Nisenan, a name already well established, for what is sometimes called "Southern Maidu." The present grammar is of Maidu. There are perhaps a dozen speakers still alive, with no significant dialect distinctions.

I met my own principal informant, Maym Hannah Gallagher, in 1954. Over the next three years we developed a marvellous symbiosis compounded of affection, respect, and pure intellectual excitement. The linguist-informant relationship turned out to be one of those especially satisfying ones which modern scholarship has brought into being. She labored with talent, patience, and great motivation to put the language of her mother's people before me.

Aside from Mrs. Gallagher, the others whom I have used as informants are: Lena Thomas Benner (Mrs. Gallagher's mother, now dead), Leone Morales, George Peconom, Roxie Peconom (now dead), Marie Potts, Dan Williams (now dead).

An early grammar, written by Professor Roland B. Dixon, was published by Boas in Part 1 of Bulletin 40 of the Bureau of American Ethnology (Dixon, 1911). In the following year a collection of texts was also published (Dixon, 1912). Aside from a few short wordlists, nothing else on Maidu is available in print.

Maiduan is a Penutian family, clearly (though distantly) related to Yokuts, Wintun, the Miwok languages, and Costanoan. Most of the details of these relationships remain to be worked out, although enough has been done to date to demonstrate the validity of a genetic connection (Dixon and Kroeber, 1919; Pitkin and Shipley, 1958; Broadbent and Callaghan, 1960; Callaghan, 1962).

Sapir's proposed broader Penutian grouping has been extensively (though somewhat impressionistically) explored in important papers by Sapir and Swadesh (1953), Swadesh (1954, 1956), and Hymes (1957). It seems probable that many of Sapir's Penutian proposals will turn out to be correct. It is important to note, however, that no sound correspondences have appeared in print as evidence of a relationship between the California Penutian languages and anything else.

The present description, though eclectic in form, presupposes a rigorous general system of definitions and relationships—largely that proposed by my colleague, Sydney M. Lamb (Lamb, 1962, and elsewhere). He must be given credit for whatever virtues may inhere in its special features of consistency and exhaustiveness. However, the various notions and their functional relationships are pretty much those which have been developing in the main stream of American linguistic theory for the last twenty-five or thirty years. This latter point is of great importance; in recent times, the field of descriptive linguistics has been repeatedly presented with one or another quasi-messianic "true and only" theory of language structure. Most linguists, sated with these revolutionary schemes—each with its attendant swarm of jargonese new terms—are conditioned (justifiably, it seems to me) to flee at the merest hint that yet another theoretical monster may lumber into view.

Such will not be found here. Three structural levels (or, as Lamb calls them, strata) are assumed—the phonemic, the morphophonemic, and the morphemic. The morphophonemic level is "filled out," that is, in addition to morphophonemes representing various alternations, there is a morphophoneme in a one-to-one relationship with each phoneme.

The grammatical unit with phonological content is the morph, written morphophonemically. Thus, allomorphs are of only one type: those which have the grammatical structure as the basis for their distributions. A morpheme is a unit, or position, devoid of phonological content (none of

its allomorphs are phonologically determined), which represents a discrete element of meaning.

These notions of "morph" and "morpheme" are at considerable variance with standard usage. Lamb has proposed that the unit here defined as a morpheme be called a lexeme and that the present morph be called a morpheme. I am resoundingly in favor of this, since the resulting use of the term "morpheme" would thus be more or less like that of most other linguists. No one seems to be in precise agreement with anyone else anyway when it comes to a definition of most of the primary notions in linguistics.

Three basic types of relationship, all of them implicit in current general theory, subsume the totality of the description:

(1) The relationship of a class to its members, written as: A: B + C + D + E, that is, class A contains items (or classes) B, C, D, and E.

(2) The relationship of a construction to its constituents, written as: A: B C D, that is, construction A consists of the (ordered) constituents B, C, and D.

(3) The relationship of a morpheme, morphophoneme, or phoneme to the respective representative (allo)morph, phoneme variant, or (allo)phone. This is formulated in various ways, depending on the stratum involved: Allophone-phoneme relationships are stated in prose (110, 113) or by charting (120). Phoneme variant-morphophoneme relationships are stated in prose (321) or with the formula: ‖A‖ B__ : /C/, that is, the morphophoneme A in the (morphophonemic) environment after B is phonemically C. (322, 330). Allomorph-morpheme relationships are tabulated in various ways (611.2(1)(b), 631, etc.).

Although the bias of the present grammar stems in large part from Lamb's organization of general theory, the interpretation is entirely my own responsibility. So, also, am I responsible for any inelegance, ineptitude, or inadequacy in the presentation.

LITERATURE CITED

Broadbent, Sylvia M., and Catherine A. Callaghan

1960. "Comparative Miwok: a Preliminary Survey." International Journal of American Linguistics, Vol. 26, No. 4, pp. 301-316.

Callaghan, Catherine A.

1962. "Comparative Miwok-Mutsun with Notes on Rumsen." International Journal of American Linguistics, Vol. 28, No. 2, pp. 97-107.

Dixon, Roland B.

1905. "The Northern Maidu." Bulletin of the American Museum of Natural History, Vol. 18, Part 3, pp. 119-346.

1911. "Maidu Grammar." Bureau of American Ethnology Bulletin 40, Vol. 1, pp. 697-734.

1912. "Maidu Texts." Publications of the American Ethnological Society, Vol. 4.

Dixon, Roland B., and A. L. Kroeber

1919. "Linguistic Families of California." University of California Publications in American Archaeology and Ethnology, Vol. 16, No. 3, pp. 47-118.

Hymes, Dell H.

1957. "Some Penutian Elements and the Penutian Hypothesis." Southwestern Journal of Anthropology, Vol. 13, No. 1, pp. 69-87.

Lamb, Sydney M.

1962. Outline of Stratificational Grammar. California Book Company.

Pitkin, Harvey, and William Shipley

1958. "A Comparative Survey of California Penutian." International Journal of American Linguistics, Vol. 24, No. 3, pp. 174-188.

Sapir, Edward, and Morris Swadesh

1953. "Coos-Takelma-Penutian Comparisons." International Journal of American Linguistics, Vol. 19, No. 2, pp. 132-137.

Swadesh, Morris

1954. "Perspectives and Problems of Amerindian Comparative Linguistics." Word, Vol. 10, No. 3, pp. 306-332.

1956. "Problems of Long-range Comparison in Penutian." Language, Vol. 32, No. 1, pp. 17-41.

LIST OF SYMBOLS

(X)	X is optional (Chapter One)
[X]	X is phonetic (Chapter One)
[X]	X is optional (Chapter Two)
$\pm$ X	with or without X
/X/	X is phonemic
‖X‖	X is morphophonemic
{X}	X is morphemic
X ~ Y	X varies with Y
X $\overset{f}{\sim}$ Y	X varies freely with Y
((X))	a class of items with X as one of its members
C	consonant (Chapter One)
V	vowel (Chapter One)
---	"elsewhere" or "everywhere"

For a discussion of class symbols and the forms of rules, see the Introduction, Section 660, and Appendix C.

CHAPTER ONE

PHONOLOGY

100. PHONEMICS

Maidu has eighteen consonants, six vowels, three degrees of stress, and four junctures, or a total of thirty-one phonemes. These are shown below:

Consonants

Restricted:					
Voiced imploded stops	b	d			
Voiceless glottalized stops	p̓	t̓	c̓	k̓	ʔ
Unrestricted:					
Voiceless plain stops	p	t	c	k	
Spirants		s			h
Nasals	m	n			
Semivowels	w		j		
Lateral		l			

Restricted consonants are limited to syllable-initial position.

Vowels

High	i	y	u
Low	e		o
		a	

Stress

Primary Secondary Weak (unmarked)

Junctures

Phonological word juncture	+
Pause form	,
Hesitation form	. . .
Terminal contour	.

110. Articulation and Allophony

Maidu is laxly articulated and is normally pronounced slowly and deliberately. Fortis articulation and rapidness of delivery connote emotion, especially impatience or irritation. Further details concerning the general articulatory characteristics of consonants and vowels are to be found in the appropriate sections immediately following.

111. Consonants. The voiced stops /b/ and /d/ are imploded. A partial vacuum is formed in the area between the glottis and the point of articulation. The release is effected by breaking this vacuum, with a resulting slight rush of air into the mouth. In some idiolects the implosives are startlingly fortis, with a clearly audible smacking or clicking sound at the instant of release. Other speakers produce less fortis implosions, although, in contrast to the characteristically lax pronunciation of the language in general, the articulation of /b/ and /d/ is tense in all idiolects before high vowels, particularly /y/. It is important to note that nonimplosive allophones for /b/ and /d/ do not occur.

/b/:

bín	'pursue'	bý	'blow'	butú	'hair'
béj	'after'	bá	'salt'	bó	'trail'

/d/ is apico-alveolar:

dí	'grow'	dý	'bushes'	dúpe	'cold'
dék	'wet'	dá	'wipe'	dó	'bite'

The glottalized stops are normally lax, particularly when they are not word-initial. Although some slight glottal coarticulation is never absent, the acoustic quality of these stops is often similar to that of voiceless unaspirated stops. Only in some idiolects or in emphatic speech is fortis glottalization employed.

/ṗ/:

ṗilís	'hot'	ṗýbe	'boy'		
huṗék	'open'	ṗàǩá	'limb'	ṗoṗó	'hay'

/ť/ is apico-alveolar:

ťík	'enough'	ťýn	'rotten'	ťú	'fence'
ťés	'short'	ťaťá	'dogwood'	ťók	'sharp'

/ċ/ is a palatal, similar to [tš]. In the speech of older persons, it is a lamino-palatal stop; younger bilingual informants, however, have substituted an affricate, presumably because of the influence of English:

ċí	'clothing'	ċý	'grab'	ċùkú	'sour'
ċedá	'breakfast'	ċá	'tree'	ċó	'burn'

/k̓/ is never fronted. It is somewhat more strongly glottalized than are /p̓/, /t̓/ and /c̓/:

k̓í	'pinch'	k̓ylý	'roll'	k̓ùk̓ú	'rope'
k̓é	'sp. plant'	k̓á	'secret'	k̓ódo	'country'

/ʔ/ is weakly articulated except when the speaker is being emphatic or deliberate. The phoneme is virtually absent in some idiolects or in allegro discourse:

ʔítu	'pain'	ʔypé	'only'	ʔú	'also'
heʔé	'yes'	kaʔá	'do'	ʔó	'rock'

The voiceless plain stops are of unrestricted occurrence. /c/ is a palatal comparable to /c̓/, that is, it is an affricate in the speech of bilinguals and a stop in the speech of monolinguals. /c/ is a rare phoneme, with only five occurrences in the total corpus, viz.,

cy	(plural)	ʔàkícʔanà	'raccoon'
cikíni	'chicken'	cyký	'tickle'
catátak̓à	'rattlesnake, rattle'		

Aside from /c/, for which all the possible environments are not attested, each of the voiceless plain stops is represented by three principal allophones. Before a vowel, /,/, or /./, these stops are moderately aspirated and rather fortis, for example,

pí	'crowd'	wéjep.	'talk!'
tú	'orate'	jahát.	'well'
cyký	'tickle'	---	
kó	'snow'	bének.	'tomorrow'

Before a nasal, or a stop of any series, the voiceless plain stops are unreleased. This includes first members of geminate clusters, for example,

k̓áppe	'ripe, done'	ʔýtno	'descend hence'
ʔàkícʔanà	'raccoon'	ʔékpy	'sp. manzanita'

Before a spirant, a semivowel, or /l/, the plain stops are released but unaspirated and lenis, for example,

hápje	'hand hither'	húkitsa	'solitary'
---		mákwonò	'try'

In addition to the general distribution described above, /k/ is represented by fronted and backed allophones, determined as follows: A prevelar variant occurs before /i/ or /e/ and also after /i/ or /e/ when the following segment is a consonant, for example,

kìwí	'back'	ʔékpy	'sp. manzanita'

A mid-velar variant occurs before /y/ or /a/ and also after /y/ or /a/ when the following segment is a consonant, for example,

ký	'make'	mákwonò	'try'

A post-velar variant occurs before /u/ and /o/ and also after /u/ or /o/ when the following segment is a consonant, for example,

ʔúk 'whine' kó 'snow'

The spirants are unrestricted in distribution. They are rather complex with regard to the distribution of allophones. /s/ is a postalveolar slit spirant, backed but without retroflexion. Younger bilingual speakers tend, at times, to substitute a more fronted spirant in some positions; monolinguals, however, invariably produce allophones clustering around [s̱]. Syllable-initially, /s/ is somewhat fortis, for example,

sèwí 'river' hálsa 'liar'

As first consonant in a two-consonant cluster, when the second consonant is a stop or a nasal, /s/ is lenis and short, for example,

máśćoǩò 'five' wómbusno 'keep crying'

As first consonant of a two-consonant cluster, when the second consonant is a semivowel or /l/, /s/ is fronted and rather long, for example,

wísla 'chipmunk' týswoje 'stand'

Geminated /s/ is long and fortis, for example,

sýssy 'prefer' mussú 'cheek'

Before /,/ or /./, /s/ is backed and lenis, for example,

peʔás. 'I ate.' hés. 'How?'

/h/ has the following variants:

Before /i/, /h/ is a prevelar spirant with minimum friction, for example,

híky 'nose' hít 'douse'

Before /e/ and /y/, /h/ is a postvelar spirant with minimum friction, for example,

hýtpe 'fat' hémmak 'count'

Before /u/, /o/, and /a/, /h/ is a glottal spirant, for example,

huhú 'lungs' hó 'yes'

hàǩá 'packstrap'

In syllable-final position, /h/ is a voiceless, nonvocalic offglide with the same position of articulation as the preceding vowel, for example,

jűhju 'quail' méhjodǒj 'seize'

The two nasal phonemes, /m/ and /n/, are similar in allophony, with one important exception. /m/ is represented by a velar allophone [ŋ] immediately before /k/ or /ǩ/. In contrast to this situation, /n/ is represented by [n] in the same environment, for example,

/mówinỳmky/ : /mówinỳ[ŋ]ky/ 'water bug,' but

/dónky/ : /dó[n]ky/ 'catcher'

In sentence-final position, that is, before /./, /m/ and /n/ are represented by a continuum of phonetic possibilities ranging from complete voicelessness to complete voice, for example,

/m/ : [M. . . m]:

ní kaḱás hudásupem. 'I'm drunk.'

/n/ : [N. . . n]:

ʔyḱójʔis nìktyníḱan. 'I'm going with my younger brother.'

Initially and intervocalically, /m/ and /n/ are rather fortis and fully voiced, for example,

mòmí 'water'	mákmàkky 'yellowhammer'
naná 'chest of body'	núsnùsi (proper name)

Before consonants (except as noted for /m/ above), the allophones of /m/ and /n/ are lax, with a freely varying component of partial voicelessness, for example,

hámsi 'acorn'	lámpe 'long'
míńki 'your'	hénte 'whereabouts'

/w/ is a bilabial semivowel with the quality of nonsyllabic [u] before or after /i/ or /y/ and before /u/, but somewhat lowered before or after /e/, /a/, or /o/. In intervocalic position, the allophony is determined by the following vowel. /w/ never occurs after /u/ in the same syllable. Examples are,

wísla 'chipmunk'	kówkòwpe 'gray'

/j/ is a palatal semivowel with the quality of nonsyllabic [i] before or after /u/ or /y/ and before /i/, but somewhat lowered before or after /e/, /a/, or /o/. In intervocalic position the allophony is determined by the following vowel. /j/ never occurs after /i/ in the same syllable. Examples are,

jamáni 'mountain'	pújka 'dove'

/l/ is an apical alveolar lateral of unrestricted occurrence. It is somewhat longer in postvocalic position, but has no backed quality in that position, for example,

lámpe 'long'	dáldàlpe 'white'

112. Vowels. The high vowel phonemes, /i/, /y/, and /u/, are represented, in certain positions, not by fixed phones, but by small, though clearly perceptible, variations between two phones. Such positions are indicated below by the formula: [I . . . i], which is to be read: "The usual quality for the position is [I], but there is free variation in the direction of, and as far as, [i]."

Variation in vowel length is nonphonemic and is based on the following criteria: Vowels are very short (less than one mora) in unstressed syllables. Vowels are short (about one mora) in closed syllables with primary or secondary stress. Vowels are long (about one and one-half to two morae) in open syllables with primary or secondary stress.

In allegro speech, these distinctions of length are much less marked. The most dramatic effect of allegro speech is, however, the centralization of the vowels in unstressed syllables. With respect to this centralization, the six vowel phonemes fall into three pairs, as follows: /y/ and /a/ exhibit unstressed, rapid-speech allophones which approach [ə] very closely. At times it is difficult to distinguish an allophone of /a/ from one of /y/. /i/ and /u/ centralize just enough for the ear to catch the effect. Their movement to the center is accompanied by a marked drop to the neighborhood of [I] and [U] respectively. /e/ and /o/ do not approach [ə] so closely as /y/ and /a/, but they centralize much more than do /i/ and /u/. The only restriction to this centralizing in allegro speech is consistency in a given utterance, that is, a speaker will place all of the unstressed vowels at a balanced distance from [ə].

The chart which follows shows the phonetic representations for the vowel phonemes in the seven environments which are significant for allophonic distinctions. The environments are:

1. Initial stressed open syllable.
2. Noninitial stressed open syllable.
3. Initial unstressed open syllable.
4. Noninitial unstressed open syllable.
5. Initial stressed closed syllable.
6. Noninitial stressed closed syllable.
7. Unstressed closed syllable.

	1	2	3	4	5	6	7
/i/	[i]	[iˇ...i]	[iˇ]	[i...iˇ]	[I...iˇ]	[iˇ...i]	[I]
/u/	[u]	[uˇ...u]	[uˇ]	[u...uˇ]	[U...uˇ]	[uˇ...u]	[U]
/y/	[ɨ]	[ɨˇ...ɨ]	[ɨˇ]		[ɨ...ɨˇ]	[ɨˇ]	[ɨ]
/e/	[ɛˇ]	[ɛ]	[E]				[ɛ]
/o/	[ɔˇ]	[ɔ]	[Ω]				[ɔ]
/a/	[ɑ]		[ʌ]		[ɑ]		[ʌ]

Examples of the allophones are:

	For /i/:	For /u/:
1.	híkym 'nose'	súdim 'soda'
2.	nìḱí 'my'	kulú 'yesterday'
3.	nìkí 'my'	kulú 'yesterday'
4.	míńki 'your'	kawáju 'horse'
5.	míńki 'your'	júkbom 'bear dance'
6.	ḱàwím 'dirt'	sumúm 'sugar pine'
7.	pedésim 'body louse'	ʔúsum 'elder brother'

	For /y/:	For /e/:
1.	ṕýbem 'boy'	jé 'feather'
2.	pykký 'wild pansy'	kylé 'woman'
3.	ṕyćým 'ant'	tetét 'very'
4.	híky 'nose'	péne 'two'
5.	sýndakà 'forehead'	wisétpem 'frightened'
6.	pykkým 'wild pansy'	tetét 'very'
7.	híkym 'nose'	wisétpem 'frightened'

	For /o/:	For /a/:
1.	ʔó 'rock'	sáṕym 'three'
2.	lolǒ 'container'	naná 'chest of body'
3.	lolǒ 'container'	ḱàwím 'dirt'
4.	júkbo 'bear dance'	wépa 'coyote'
5.	sólḱan 'he is singing'	kákkam 'crow'
6.	lolǒm 'container'	nanám 'chest of body'
7.	júkbom 'bear dance'	wépam 'coyote'

113. Suprasegmental Phonemes. There are seven phonemes of pitch, stress, and intonation. The phonetic components of these phonemes are the following:

[:] vowel length of one and a half to two morae
[·] vowel length of about one mora
[^{3}] high pitch
[^{2}] middle pitch
[^{1}] low pitch
[↑] slight rise in pitch
[↓] slight drop in pitch
['] relative loudness and tenseness in the following syllable
[ˀ] lenis, syllable-final glottal catch, distinct from /ʔ/

The seven suprasegmental phonemes are defined below in terms of the preceding list of components. In the accompanying examples, the segments are written phonemically.

/ˊ/, primary stress, is everywhere characterized by a combination of [^{3}] and [']. In addition, there is lengthening of the vowel, with two allophones distributed as follows:

[:] occurs if the syllable is open, for example,

/ʔó/ : [ˈ^{3}o:] 'rock'

/kylé/ : [kyˈ^{3}le:] 'woman'

[·] occurs if the syllable is closed, for example,

/sól/ : [ˈ^{3}so·l] 'sing'

/ˋ/, secondary stress, is characterized by a combination of [^{1}] ~ [^{2}] and [']. As with primary stress, there is vowel lengthening with two allophones:

[:] occurs if the syllable is open, for example,

/mòmím/ : [ˈ^{2}mo:ˈ^{3}mi·m] 'water'

[·] occurs if the syllable is closed, for example,

/ʔómkanàjdi/ : [ˈ^{3}ʔo·m^{1}kaˈna·jdi] 'under the rock'

/ /, weak stress, is characterized by [^{1}] ~ [^{2}] and a short vowel (see the immediately preceding example).

/+/, plus juncture, is characterized by [↑], for example,

/kalétani+ʔymítdom/ : [^{2}kaˈ^{3}le:^{2}tani↑ʔyˈ^{3}mi·t^{2}dom] 'coming in with wagons'

When /+/ is preceded by /m/ and followed by /k/ or /ḱ/, a bilabial allophone of /m/ occurs (see the discussion of /m/ in Section 111.), for example,

/hójjam+ḱódodi/ : [ˈ^{3}ho·j^{2}ja[m]↑ˈ^{3}ḱo·^{2}dodi] 'long ago'

/,/, comma juncture, is characterized by [↑] and a clearly marked short silence before the onset of the next phrase. In addition, there is usually [’], for example,

/hójjam+ḱódodi,wépam+/ (etc.) :

[ˈ^{3}ho·j^{2}ja[m]↑ˈ^{3}ḱo:^{2}dodi’↑(pause)ˈ^{3}we:^{2}pam↑], etc. 'long ago, Coyote,' etc.

A nasal preceding /,/ is usually voiceless, for example,

/ʔymítdom,ʔamá+/ etc. : [^{2}ʔy^{3}mi·t^{2}do[M]’↑(pause)^{2}ʔaˈ^{3}ma:↑], etc. 'coming in, then,' etc.

/.../, hesitation form, occurs rarely, and always after open syllables with primary stress. It is characterized by an indefinitely long vowel, held to fill the period of hesitation, for example,

/ʔadóm+pí.../ : [^{2}ʔaˈ^{3}do·m↑ˈ^{3}pi::: ... (ad lib.)] 'Then many----------'

/./, period juncture, represented by [↓] and a [31] glide on a preceding syllable with primary stress, for example,

/ʔó./ : [ˈ31o:↓] 'rock.'

If the preceding syllable does not have primary stress, then there is a [1] on all syllables back to the end of the last syllable with primary stress (which is itself unaffected), for example,

/hójjam+ḱódodi./ : [ˈ3ho·j2jam↑ˈ3ḱo:1dodi↓] 'long ago'

A nasal preceding /./ is usually voiceless, for example,

/mɔ̀mím./ : [ˈ2mo:ˈ31mi·[m]↓] 'water'

200. PHONOTACTICS

The syllable canons are:

CV́(Cˈ)

CV̀(Cˈ)

CV(Cˈ)

Cˈ must be one of the unrestricted consonants (see Section 100.); C may be any consonant.

It may be seen from the canon that there are no vowel clusters. The only consonant clusters are those which occur fortuitously in medial position and across syllable boundaries. Restricted consonants may not be first members of such clusters. Those attested in the corpus are charted below:

	b	d	p̓	t̓	c̓	k̓	ʔ	p	t	c	k	s	h	m	n	w	j	l
p	X	X	X	X	X	X	X	X	X		X	X		X	X	X	X	X
t	X	X	X	X	X	X	X	X	X		X	X		X	X	X	X	X
c							X											
k	X	X			X	X	X	X	X		X	X		X	X	X	X	X
s	X	X			X	X	X	X	X		X	X		X	X	X	X	X
h														X		X	X	
m	X	X	X		X	X	X	X	X		X	X	X	X		X	X	X
n	X	X			X	X	X	X	X	X	X	X		X	X	X	X	X
w	X	X			X	X	X	X	X		X	X		X	X	X	X	X
j	X	X		X	X	X	X	X	X		X	X	X	X	X	X	X	X
l	X	X			X		X	X	X		X	X		X	X	X		X

The gaps in the chart may be taken as fortuitous; /c/ is very rare, as is /h/ in syllable-final position. Affixes beginning with /p̓/, /t̓/, and /h/ are also uncommon.

Syllables may occur only with following suprasegmentals; therefore: An utterance always begins with a syllable, never with a suprasegment. /.../ may follow only an open syllable with primary stress.

A macrosegment is defined as any portion of an utterance bounded in prior position by silence (including pause, as defined in Section 113. for /,/) and in following position by /,/ or /./. The following utterances illustrate the sequences found in various types of macrosegments, as well as the relation between syllables and suprasegments. All segmental material is written phonemically in the phonetic examples:

/ʔó./ : [ˈ^{31}ʔo:↓] 'rock'

/sidí./ : [^{2}siˈ^{31}di:↓] 'city'

/sidína./ : [^{2}siˈ^{3}di:^{1}na↓] 'to (the) city'

/sèwína./ : [ˈ^{2}se:ˈ^{3}wi:^{1}na↓] 'to (the) river'

/mòmím./ : [ˈ^{2}mo:^{31}mi·m↓] 'water'

/mómna./ : [ˈ^{3}mo·m^{1}na↓] 'to (the) water'

/ʔómkanàjdi./ : [ˈ^{3}ʔo·[ŋ]^{1}kaˈna·jdi↓] 'under the rock'

/hójjam+ḱododi./ : [ˈ^{3}ho·j^{2}ja[m]↑ˈ^{3}ḱo:^{1}dodi↓] 'in olden times'

/hójjam+ḱódodi, wépam+ʔynópaʔàjḱan./ : [ˈ^{3}ho·j^{2}ja[m]↑ˈ^{3}ḱo:^{2}dodi'↑ (pause)ˈ^{3}we:^{2}pam↑ʔyˈ^{3}no:^{1}paˈʔa·jḱan↓] 'A long time ago, Coyote was going along.'

/ʔadóm+pí... wasásа+nìsé+túwèjedom, nìsé+wéjeʔùsan./ : [^{2}ʔaˈ^{3}do·m↑ˈ^{3}pi:::^{2}waˈ^{3}sa:^{2}sa↑ni:ˈ^{3}se:↑ˈ^{3}tu:ˈ^{2}we:jedom'↑(pause) ^{2}ni:ˈ^{3}se:↑ˈ^{3}we:^{1}jeˈʔu:san↓] 'Then he used to talk to us, instructing us concerning many things.'

/ʔamá, wóham+hadójpem+kalétani+ʔymítdom, ʔamá+ʔínjanàm+jawídom, emigrant+ʔawónom./ : [^{2}ʔaˈ^{3}ma:'↑(pause)ˈ^{3}wo:^{2}ham↑haˈ^{3}do·j^{2}pem↑ kaˈ^{3}le:^{2}tani↑ʔyˈ^{3}mi·t^{2}dom'↑(pause)^{2}ʔaˈ^{3}ma:↑ˈ^{3}ʔi·n^{2}jaˈna·m↑ jaˈ^{3}wi:^{2}dom'↑(pause)ˈ^{3}e^{2}migrant↑ʔaˈ^{3}wo:^{1}nom↓] 'Then, coming in with ox-drawn wagons, were those whom the Indians called "emigrants".'

300. MORPHOPHONEMICS

The view is here taken that, for consistency of writing, there is a correlative morphophoneme for each phoneme, some representing phonemic alternations and some representing a one-to-one correspondence between phonemes and morphophonemes. There are, in addition, a small number of morphophonemes which are not correlative with phonemes and which all represent phonemic alternations.

310. One-to-One Correlative Morphophonemes

Correlative morphophonemes, representing a one-to-one correspondence, may be charted as follows:

b	d			
p	t	c	k	
	s			h
m	n			
w		j		
	l			
ˋ	+	,	.	

320. Correlative Morphophonemes Represented by Alternating Phonemes

321. Primary Stress, ‖ ´ ‖. If more than one ‖ ´ ‖ occurs between any pair of junctures or silence, then all ‖ ´ ‖ after the first one are phonemically /´/, for example,

‖ heláj bós dom, ‖ : /helájbòsdom,/ 'finishing gambling'

322. Glottalized Stops. The series of glottalized stops represents, as morphophonemes, the following phonemic alternations (P = any voiceless stop; $\dot{+}$ = any juncture; subscript numbers mark correlative members of the respective morphophonemic and phonemic classes):

‖ $\acute{P}_1$ ‖ __C: /P_1/, for example, ‖ banák̓ pe ‖ : /banákpe/ 'lit up'

‖ $\acute{P}_1$ ‖ __$\dot{+}$: /P_1/, for example, ‖ pît̓ ‖ : /pít/ 'defecate!'

323. Vowel Sequences.

‖ V ‖ V__ : /ϕ/, for example, ‖ jâk k̓e ano ‖ : /jákk̓eno/ 'you seem'

330. Noncorrelative Morphophonemes

331. ‖ I ‖ represents the following alternation (for an explanation of ‖ ' ‖, see Section 335.):

‖ I ‖ V(')__: /ϕ/, for example, ‖ wépa I ‖ : /wépa/ 'coyote' (object case)

‖ I ‖ V_1 $\overset{k̓}{k}$__: /V_1/, for example, ‖ banák̓ I ‖ : /banák̓a/ 'light' (object case)

‖ I ‖ ---: /i/, for example, ‖ jamán I ‖ : /jamáni/ 'mountain' (object case)

332. ‖H‖ represents the following alternation:

‖H‖ $V_1C(C)$__: /V_1/, for example, ‖ʔy.ˊ ḱoj bè nHʔH‖ : /ʔyḱójbène ʔe/ 'let you be going'; ‖ʔy.ˊ ḱoj bỳ nHʔH‖ : /ʔyḱójbỳny ʔy/ 'you'd better go'

333. ‖æ‖ represents the following alternation:

‖æ‖ __C(C)e: /e/, for example, ‖ʔy.ˊ ḱoj ʾæ ḧe s‖ : /ʔyḱój ʔehes/ 'we all went'

‖æ‖ ---: /a/, for example, ‖ʔy.ˊ ḱoj ʾæ m‖ : /ʔyḱój ʔam/ 'he went'

334. ‖ḧ‖ represents free variation between /h/ and /ʔ/, for example, ‖ʔy.ˊ ḱoj bỳ ḧà s‖ : /ʔyḱójbỳhàs/ $\overset{f}{\sim}$ /ʔyḱójbỳʔàs/ 'we two had better go'

335. ‖ʾ‖ represents the following alternation (P = any voiceless stop; subscript numbers mark correlative members of the respective morphophonemic and phonemic classes):

‖ʾ‖ P_1__: /$\dot{P}_1$/, for example, ‖ka.ˊ k ʾæ ʾÌ s‖ : /kaḱás/ 'I am'

‖ʾ‖ V__: /Ø/, for example, ‖ka.ˊ k ʾæ ʾÌ s‖ : /kaḱás/ 'I am'

‖ʾ‖ V.ˊ__: /ʔ/, for example, ‖ć̇e.ˊ ʾÌ s ma‖ : /ć̇eʔísma/ 'that which I see'

‖ʾ‖ C__: /ʔ/, for example, ‖sôl ʾÌ s ma‖ : /sòlʔísma/ 'that which I sing'

336. ‖N‖ represents the following alternation:

‖N‖ t(V)__: /t/, for example, ‖hútu Nini‖ : /hútutini/ 'crazily'

‖N‖ ---: /n/, for example, ‖bidíp Nini‖ : /bidípnini/ 'slickly'

337. Morphophonemes of Reduplication. ‖R‖ and ‖r‖ are morphophonemes of reduplication (S = the segments—but not the stresses—of any syllable; subscript numbers mark correlative members of the respective morphophonemic and phonemic classes).

337.1 ‖R‖ S_1__: /S_1/, for example, ‖my.ˊ R‖ : /mymý/ 'that person'

337.2 ‖r‖ __C_1V_1: /C_1V_1/, for example, ‖r t̂ês pe‖ : /t̂eté́spe/ 'rather short'

338. ‖ˆ‖ represents the following alternation:

‖V̂‖ __C(ʾ)V: /V̀/ and

‖V‖ V̂C(ʾ)__: /V́/, for example, ‖sôl I‖ : /sòlí/ 'song' (object case); ‖sôl ʾI s myni‖ : /sòlʔísmyni/ 'when I sing ...'

‖V̂‖ ---: /V́/, for example, ‖sôl ky‖ : /sólky/ "singer';
‖sôl Ø‖ : /sól./ 'sing!'

339. ‖X‖ represents the following:
‖X‖ ---: /Ø/ and
‖C‖ __X: /Ø/, for example, ‖nîk X‖ : /ní/ 'I' (subject case)

CHAPTER TWO

MORPHEMICS AND MORPHOTACTICS

400. INTRODUCTION

In the present analysis, the statements of allomorphy (morphemics) and descriptions of classes and constructions (morphotactics) have been combined for each section. The organization is based on form-classes.

MAJOR FORM-CLASSES are all, themselves, constructions, as follows:

N (Noun): stem [number] case (610, 630, 640)

P (Pronoun): stem [number] case (620, 630, 640)

A (Adverb): stem {Nini} (adverbial suffix) (742)

Q (Derived Adjective): stem [{sa}] [{pe}] $\{Im_2\}$ (attributive suffix) (653)

Ad (Inherent Adjective): adjective stem $\{Im_2\}$ (652)

V (Verb): stem [tense] [aspect] mode [number] person (700)

For the class of verbs, certain complications arise which are discussed in detail in 730.

MINOR FORM-CLASSES (800) are not constructions, but single morphemes or (in the case of connectives and question words) frozen combinations of morphemes.

ROOTS are single morphemes which may function as stems in any of the above classes. There are two distributional categories: The majority of roots occur as stems in the major form-classes and are multivalent, that is, any given root may function freely in constituency with substantival, verbal, adjectival, or adverbial suffixes. The only limitation to this multivalence of roots appears to be semantic. A few roots appear only as members of one or another minor form-class. A very few roots appear as multivalent roots in major form-classes and in one or another minor form-class.

STEMS are roots or combinations of roots in constituency with nominal, verbal, adjectival, or adverbial suffixes. Although stems, like roots, are multivalent, they tend to be especially complex in inner structure when they are in constituency with verbal elements.

Substantives are in four external distribution classes (660):

S Subject
O Object
L Locative
Po Possessive

Verbs are also in four external distribution classes (750):

Vf Finite Verb
Vk Copula
Vc Participial
Vd Dependent Verb

The minor form-classes, lacking internal inflection, are defined by external distribution (800).

Adjectives occur only inside Noun expansions (753); adverbs occur only inside Noun and Verb expansions (842).

410. Derivation

Two situations are to be described.

411. The Morph ‖j‖. As a single instance, the morph ‖j‖ is found with a few stems as a kind of derivational stem-formant for making verbs from nouns, verbs from verbs, and (in one instance) a noun from a verb. The process is nonproductive; all of the occurrences in the corpus are listed below.

Verbs from nouns:

ć̇awá	'jaw, chin'	ć̇awáj	'to chew'
helá	'game'	heláj	'to gamble'
hadó	'a pack'	hadój	'to carry on the back'
ḱ̇újla	'necklace'	ḱ̇újlaj	'to wear a necklace'
sedé	'blood'	sedéj	'bleed'

Verbs from verbs:

ká	'to do'	káj	'to say'
má	'to make'	máj	'to say (quote)'
ʔejá	'to do thus'	ʔejáj	'to say thus'
hesá	'how be'	hesáj	'how say'
mé	'to take'	méj	'to give'

Noun from verb (with change of preceding vowel):

ḱ̇úlu	'to be orphaned'	ḱ̇úlaj	'orphan'

This morph must consist of at least two morphemes, and possibly even three or four. No other derivational elements of a similar nature have been discovered.

412. The gerund with {ma} 'what, that which, where.' A type of noun occurs which is inflected for person and number in the manner of a verb. In internal structure it is like the ((myni)) class (737): VT [N] P {ma}, for example,

1S ‖bîs ʼI s ma‖ : /bìsʔísma-/[1] 'where I live'
1D ‖bîs ɦa s ma‖ : /bísʔàsma-/, etc. 'where we two live'
1P ‖bîs ɦe s ma‖ : /bísʔèsma-/, etc. 'where we live'
2 ‖bîs nim ma‖ : /bísnimma-/ 'where you live'
3 ‖bîs ∅ ma‖ : /bísma-/ 'where he, she, it, they live'

These stems are in constituency with the noun case suffixes, for example,

/ʔaním sɔ̀lím kaɦán sɔ̀lʔísmam./ 'That song is what I sang.
/mym hybɔ́bem kaɦán bísmanimmam./ 'That little house is where you will live.'

500. SHAPES OF ROOT MORPHS

It is convenient to divide all the morphs into two categories: ROOTS, consisting of at least one segmental syllable along with ‖ˊ‖ or ‖ˆ‖; and AFFIXES, which may contain only a single morphophoneme. The chart which follows shows the percentages for various shapes found in a lexical list of one thousand root morphs. The actual numerical count for any particular shape may be obtained by reading the percentage figure as a whole number.

A small number of common morphs occur with primary stress as part of the morph. This stress invariably occurs on the syllable following the segmental elements of the morph, for example,

mo.ˊ 'to drink'; modɔ́m 'drinking';
mowéten 'having drunk'; moɦán 'he's drinking'; etc.

Syllable Canon	Morph Canon	Percentage of Occurrence	Example
CV	cv	1.4	je 'to come'
	cv́	8.0	já 'flower'
	cv.ˊ	4.0	pe.ˊ 'to eat'
total		13.4	

[1]The phonemic representations of stems minus inflectional elements are written throughout with following hyphens.

Syllable Canon	Morph Canon	Percentage of Occurrence	Example	
CVC	cvc	8.9	ḱoj	'to go away'
	cv́c	1.8	héw	'yes'
	cv̂c	21.5	môm	'water'
total		32.2		
CVCV	$c_1v_1c_1\acute{v}_1$	1.7	teté	'big'
	$c_1v_1c_2\acute{v}_1$	8.5	jahá	'good'
	$c_1\acute{v}_1c_2v_1$	2.6	húmu	'to sigh'
	$c_1v_1c_2\acute{v}_2$	7.4	ʔejý	'ice'
	$c_1\acute{v}_1c_2v_2$	3.3	wépa	'coyote'
total		23.5		
CVCVC	$cv_1c\acute{v}_1c$	10.6	jamán	'mountain'
	$cv_1c\acute{v}_2c$	7.0	pamín	'wild currant'
	$c\acute{v}_1cv_2c$	1.9	hájum	'to yawn'
	$c\acute{v}_1cv_1c$	1.1	pálaḱ	'headstall'
total		20.6		
CVCCV	$c\acute{v}_1ccv_1$	1.5	jónno	'horn'
	$c\acute{v}_1ccv_2$	3.0	hýkwo	'grouse'
	$cv_1cc\acute{v}_1$	.2	mussú	'cheek'
	$cv_1cc\acute{v}_2$	.4	majhí	'salmon'
total		5.1		
CVCCVC	$c\acute{v}_1ccv_1c$	1.1	wílliw	'to twirl'
	$c\acute{v}_1ccv_2c$	1.1	ʔínbuk	'fisher'
	$cv_1cc\acute{v}_2c$	.3	bajlím	'violin'
	$cv_1cc\acute{v}_1c$	.1	ʔessém	'cautious'
total		2.6		
CVCVCV	cvcv́cv	.7	hudásu	'drunk'
	cv́cvcv	.1	mówaso	'wild parsnip'
total		.8		
CVCCVCV	cv́ccvcv̀	.3	ʔínjanà	'Indian'
total		.3		
CVCVCCV	cv́cvccv	.2	ʔówenċi	'orange'
total		.2		

Syllable Canon	Morph Canon	Percentage of Occurrences	Example	
CVCCVCVC	cv́ccvcv̀c	.4	húmp̀ilì̀s	'hummingbird'
total		.4		
CVCVCVCV	cvcv́cvcv̀	.3	helíjenè	'wolf'
total		.3		
CVCVCCVC	cvcv́ccvc	.2	hat́ísćem	'to sneeze'
total		.2		
CVCVCCVCV	cv̀cv́ccvcv̀	.2	ʔàkíc ʔanà	'raccoon'
total		.2		
CVCVCCVCCV	cv̀cvccv́ccv	.1	ʔèlespújka	'dove'
total		.1		
CVCCVCVCVC	cv́ccvcv̀cvc	.1	kómp̀ic̀ìlip̀	'barnswallow'
total		.1		

Total percentages:

Monosyllabic morphs	45.6
Disyllabic morphs	51.8
Polysyllabic morphs	2.6
Morphs with vowel harmony (all disyllabic)	27.4

600. THE SUBSTANTIVE

The SUBSTANTIVES may be divided into two subclasses: NOUNS, characterized by an optional dual, the absence of a plural for most forms (but see 632), and the possibility of expansion (650); PRONOUNS, characterized by obligatory duals and plurals and no expansions.

610. Nouns

611. Types of Stem (ST). There are two stem-types for nouns: The ((né)) class coincides almost exactly with a semantic category, namely, the kinship terms. Members of ((né)) are inalienably possessed and are limited to second-member position in certain compounds:

first member	second member			
{nîḱ	né}	:	níknè-	'my mother'
{mín	né}	:	mínnè-	'your mother'
{my.˙	né}	:	mynέ-	'mother'

One of the three pronoun morphemes represented above always occurs as first member of the compound.

The morphemes of the ((né)) class are:

{né}	'mother'	{sâḱ}	'grandchild,' etc.
{béḱy}	'father'	{mâs}	'sibling-in-law'
{ʔusú}	'elder brother'	{ḱúpa}	'father-in-law,' etc.
{ʔéti}	'elder sister'	{pêj}	'grandchild'
{tŷn}	'younger brother'	{pêj né}[2]	'daughter-in-law'
{ḱá}	'younger sister'	{bonó}	'uncle'
{ḱomá}	'bereaved parent'	{kât}	'aunt'
{pêt}	'mother-in-law,' etc.	{pôs}	'cousin'
{kotó}	'grandmother,' etc.	{kâm}	'nephew,' etc.
{ʔópa}	'grandfather,' etc.	{pó}	'daughter'

The forms {p̀ý Ibe} 'boy, son' and {té} 'child' are not members of this class.

All other monomorphemic and polymorphemic stems occurring in noun constructions are described in the two groups below:

(1) (a) Those stems which are identical to root morphemes, for example,

{té},	/té-/	'child'
{wépa},	/wépa-/	'coyote'
{c̀í},	/c̀í-/	'clothes'
{sôl},	/sól-, sòl-/	'song'
{piláto},	/piláto-/	'pan'

(b) The stem {kylé} 'woman' forms a class alone:

‖kylók‖ /kylók-/ occurs only with:

(1) {pe} : /kylókbe-/ 'old woman' (653)

(2) {cy} ; /kylóknono-/ 'women' (632)

‖kylé‖ /kylé-/ in all other environments.

(2) Those stems which contain more than one morpheme:

(a) Compounds with two roots, for example,

{ḱûm}	'hole'	{hý} 'house': /ḱùmhý-/	'sweathouse'
{ḱûm.}	'hole'	{pît́} 'faeces': /ḱúmpìt́-/	'mud'
{jîm}	'arm'	{lût́} 'real': /jímlùt́-/	'right (dexter)'
{má}	'hand'	{wŷḱ} 'one': /máwŷk-/	'five'
{môm}	'water'	{páno} 'grizzly': /mòmpáno-/	'otter'
{ʔêk}	'day'	{pe.˙} 'to eat': /ʔékpe-/	'lunch'

[2]Literally, 'grandchild-mother.'

(b) Compounds with root and verbal auxiliary, for example:

{jásk̀ak} 'skinny' -{no} 'along': /jásk̀akno-/ 'skinny man'

(c) Compounds with root and distributive morpheme {Rto}, for example,

{sêw}	'river'	{Rto} 'all around': /séwsèwto-/ 'rivers all around'
{pakán}	'bog'	{Rto} 'all around': /pakánkànto-/ 'bogs all around'
{bó}	'trail'	{Rto} 'all around': /bóbòto-/ 'trails all around'
{jamán}	'mountain'	{Rto} 'all around': /jamánmànto-/ 'mountains all around'
{té}	'child'	{Rto} 'all around': /tétèto-/ 'children all around'

(d) Stems of unique composition. A small number of stems occur which contain various noun roots and other identifiable morphemes, but which have at least one segmental element of unique occurrence. These items are listed below:

{pît̀}	'faeces'	ko (?) {lolό} 'container': /pít̀kolòlo-/ 'intestines'
{k̀âm}	'belly'	{pûm} 'membrane' pu (?): /k̀ámpùmpu-/ 'tripe'

(e) All noun stems may occur with the diminutive morpheme {Ibe}. It should be noted that pronominal stems do not occur with {Ibe}. Examples of stems containing {Ibe} are:

{ʔό}	'rock'	{Ibe}: /ʔόbe-/ 'pebble'
{p̀ý}[3]	'boy'	{Ibe}: /p̀ýbe-/ 'boy'
nìkk̀á-	'my sister'	{Ibe}: /nìkk̀ábe-/ 'my little sister'
k̀ùmhý-	'sweathouse'	{Ibe}: /k̀ùmhýbe-/ 'little sweathouse'
{sôl}	'song'	{Ibe}: /sòlíbe-/ 'ditty'

612. The agentive {ky}. Any verb stem (of appropriate content) may occur with the morpheme {ky}. Such combinations are noun stems:

ST: VS {ky}

The agent in such noun stems may be either active or passive, for example,

/sólti-/ 'to play music' {ky} /sóltiky-/ 'musical instrument' or, 'musician, performer'

---

[3]The morpheme {p̀ý} never occurs except with {Ibe} or with an allomorph of {cy}, namely, ‖t́yt́y‖. The {Ibe} has no semantic content in the construction /p̀ýbe/, which means 'immature male of any size.'

{ky} may thus be compared to er in an English form like 'reader,' where the meanings 'something to read' and 'someone who reads' are equally possible. Examples are:

/ć́ámmini haj ka?ámkano pekým./
knife with thou art someone who eats
'You eat with a knife.'

/peký nìk méj./
something to eat me give!
'Give me something to eat.'

But the agent is not always human; it may be the instrument by means of which something is done:

/byhýmky nìk sójep./
something to stab with me hand!
'Pass me a fork!'

Thus the content of {ky} may be summarized with three English constructions:

(1) someone who ..., for example, /mùhúnky/ 'hunter'

(2) something to ... with, for example, /huníky/ 'cutter,' that is, 'saw'

(3) something to ..., for example, /moký/ 'beverage, potable'

613. {wonó}. The morpheme {wonó} 'long ago' occurs as second member in the formation of compound noun stems, resulting in a form with the meaning 'That which ... long ago,' for example,

/wéjewonò-/ 'what was said long ago'

/bíswonò-/ 'long-ago dwelling place'

The semantic range does not extend beyond the speaker's lifetime. {wonó} also appears in an independent verb construction (737).

620. Pronouns

The formal features which distinguish the pronoun from the noun stems have been stated in Section 600. In the singular, pronoun stems (pP) are further distinguished by their occurrence with case suffix allomorphs different from those occurring with noun stems (nN). In the dual and plural it is the allomorphy of the number suffixes which provides a criterion for formal distinction. The dual and plural stems as such occur with the same case suffix allomorphs which are found with noun stems.

There are four pronoun morphemes:

{nîḱ} first person

{mín} second person

{mý} demonstrative

{máj} third person

Except for {mý}, these morphemes are represented each by a single morph.

It will be observed that {máj}, third person, has no singular form. The third person singular concept is expressed in three ways:

(1) By a noun construction, usually with {mý} in the attributive position:

/mym kylém ʔas mym májdy loló méjk'an./
that woman that man basket gave : 'She gave him a basket.'

(2) By {mý} commonly and freely, for persons, animals or things:

/mým kak'án nìkbék'ym./
that one is my father : 'He is my father.'

/mým kak'án nìk'í lýkt'akym sým./
that one is my something to crawl onto dog pet : 'It's my horse,' 'That's my horse.'

/mým kak'án tájjamànim./
that one is west mountain : 'That's Mount Lassen.'

(3) By {mý} + {R}, intensive, (337.1) for persons and personified creatures:

‖my . ˙. R‖ : /mymý-/ 'that person,' for example,

/mí mak'á mymýk kylém./
thou art his woman (question) : 'Are you his wife?'

/mymým kak'án wólem./
he is white man : 'He is a white man.'

The allomorphs for {mý} are:

‖mý‖ in the singular, with the subject and object case suffixes
and
‖my . ˙‖ elsewhere.

Examples of the use of {nîk'}, {mín}, and {mý} with the kinship terms are given in 611.

630. The Number Suffixes

631. The Dual {c̀o}. Expression of the dual is obligatory with the pronoun stems but optional and uncommon with noun stems. The allomorphs are distributed as follows:

{ć̇o}

allomorph:	occurs with:	example:
‖Xsa‖ $\overset{f}{\sim}$ ‖Xsaw‖	{nîk̇} 'I'	nìsá- 'we two'
‖sa‖	{mý} 'that'	mysá- 'those two'
‖ć̇e‖ $\overset{f}{\sim}$ ‖ć̇o‖	{mín} 'thou'	mínć̇e-, mínć̇o- 'you two'
‖ć̇o‖	{máj} 'they'	májć̇o- 'they two'
‖Ić̇o‖	all noun stems	mykotóć̇o- 'two grandmothers' té̋ć̇o- 'two children' jèpíć̇o- 'two men'

632. The Plural {cy}. As with the dual, the plural is obligatory with pronouns. With most noun stems no plural morpheme occurs. It is probable, however, that the idea of plural number is prevalent in the Maidu conceptualization. Distributives (611) and other expressions with meanings like 'a bunch of ...,' 'some ...,' 'a few ...,' etc., are frequent.

A few noun stems occur with plural suffixes. The situation is complex, both in terms of content and of expression. ‖ṫyṫy‖ functions as a plural suffix with three noun stems; nevertheless, it must be considered a separate morpheme, {ṫyṫy}, for two reasons:

(a) It has a diminutive as well as a plural meaning; two of the stems with which it occurs are morphemes which share the general meaning 'diminutive human':

{té̋} 'child' {ṫyṫy} : /téṫyṫy-/ 'children'

{pý̋} 'boy' {ṫyṫy} : /pýṫyṫy-/ 'boys'

The third nominal stem involved with {ṫyṫy} as a plural suffix is probably considered a diminutive by false etymology (711.2):

{kylé̋} 'woman' {pe} attributive suffix {ṫyṫy} : /kylóṫbeṫyṫy-/ 'old women'

(b) There are a few other stems occurring with {ṫyṫy} where the plural meaning is not present but only the diminutive, for example,

{kûṫ} 'creature' {ṫyṫy} : /kûṫṫyṫy-/ 'bird'

{ʔó̋} 'rock' {Ibe} diminutive {ṫyṫy} : /ʔóbeṫyṫy-/ 'pebble,' 'little pebble'

The inherent adjective {tibí̋} 'little' (652) occurs with a special allomorph of {ṫyṫy}: ‖R‖:

‖tibí̋ R‖ : /tibíbi/ 'little' (plural)

The distributions of {cy} and {t́yt́y} may be charted as follows:

	allomorph:	occurs with:	example:
{cy}	‖Xse‖	{nîḱ} 'I'	/nìsé-/ 'we three or more'
	‖se‖	{máj} 'they'	/májse-/ 'they three or more'
		{mý} 'that'	/mysé-/ 'those three or more'
	‖cy‖	{mín} 'thou'	/míncy-/ 'you three or more'
	‖nono‖	‖kylók pe‖ 'old woman'	/kylókbenono-/ 'old women'
	‖sý‖	{jêṕ} 'male'	/jépsỳ-/ 'males'
		{ć̀âj} 'Washo'	/ć̀ájsỳ-/ 'Washos'
{t́yt́y}	‖t́yt́y‖	{té} 'child'	/tét́yt́y-/ 'children'
		{ṕy} 'boy'	/ṕýt́yt́y-/ 'boys'
	‖R‖	{tibí} 'little'	/tibíbi-/ 'little' (plural)

640. The Case Suffixes

The marking of case is obligatory for all substantives. There are ten cases in four external distribution classes as follows:

641. The Subject Case {Im_1}

	allomorphs:	occur with:	examples:
{Im_1}	‖Im‖	{mý} 'that'	/mým/ 'that one'
		all noun stems	/wépam/ 'coyote'
			/jamánim/ 'mountain'
			/banák̀am/ 'light'
	‖X‖	{nîḱ} 'I'	/ní/ 'I'
		{mín} 'thou'	/mí/ 'thou'

The subject case is used as:

(1) the performer of the action of the verb, for example,
/pím ʔínjanàm ʔas ʔunídi bísʔùsan./ A lot of Indians used to live here.'

(2) both A and B in sentences of the A = B type, for example,
/mym kylókbem makáde mínkotòm./ 'Is that old woman your grandmother?'

(3) the naming case—the nominative in the strictest meaning of the word. For this purpose some younger speakers use the object case. Those speakers who use the subject case for naming always so use it; similarly with those who use the object case for naming.

(4) a vocative, except for kinship terms of the class ((né)) (for which the object case is used). In practice, such use of the subject case is almost entirely limited to proper names. In legends and invocations the names of animals sometimes appear in a vocative context.

642. The Object Case {I}:

{I}

allomorphs:	occur with:	examples:
‖I‖	{mý} 'that'	/mý/ 'that one'
	all noun stems	/wépa/ 'coyote' /jamáni/ 'mountain' /banáka/ 'light'
‖∅‖	{nîk} 'I' {mín} 'thou'	/ník/ 'me' /mín/ 'thee'

The object case is used as:

(1) object of the verbal action or condition, for example,
/hûmbotmènim wadápi maʔát kyká./ 'Do you by chance have any kind of a sack?'

(2) the indirect object of the verbal action, for example,
/mym kylím ʔas mym pýbe loló méjkan./ 'That woman gave that boy a basket.'

(3) by some speakers as the naming case.

643. The Possessive Case {Ik}. Forms in this case occur only in expansions of nouns, which are, themselves, subjects, objects, or locatives.

{Iḱ}

allomorphs:	occur with:	examples:
‖Iḱ‖ $\overset{f}{\sim}$ ‖Iḱi‖	all noun stems	/wépak, wépaḱi/ 'coyote's' /jamánik, jamániḱi/ 'mountain's' /banáḱak, banáḱaḱi/ 'light's'
‖i‖	{nîḱ} 'I'	/nìḱí/ 'my'
‖ḱi‖	{mín} 'thou' {mý} 'that'	/mínḱi/ 'thy' /myḱí/ 'that one's'

The possessive case is used as:

(1) the marker of the actual possessor, for example,
/wélḱeťim kylókbem ʔas wépak kylém maćójʔam./ 'They say that Frog Old Woman was Coyote's wife.'

(2) the marker of the characteristic possessor:
/lýtpem mahátim wóleḱi láwani japém jahát dóti?ùsan./ 'Bread baked with white man's flour used to taste very good.'

(3) a marker with {nîḱ} 'I' in final position in certain constructions with the meaning 'for the sake of.' Such usage is in free variation with the object case form of {nîḱ}, for example,
/lòkóm hìní hýḱojtip nìḱí./ (Or: /lòkóm hìní hýḱojtip ník/) 'Go pick elderberries for me.'

644. The Locative Cases (nN1). The seven remaining cases, all with locative or instrumental meanings, belong to a single external distribution class (400).

644.1 The Comitative Case {ḱan}.

{ḱan}

allomorphs:	occur with:	examples:
‖Iḱan‖	all noun stems	/wépaḱan/ 'along with Coyote' /níktynìḱan/ 'with my younger brother'
‖ḱan‖	{nîḱ} 'I' {mín} 'thou' {mý} 'that'	/níkḱan/ 'along with me' /mínḱan/ 'along with thee' /myḱán/ 'along with that one'

The comitative case is used to mean 'along with,' for example,

/nìktyníkan nìk?ópa jamánna ?yhéj?ùsas./ 'Along with my younger brother, I used to accompany my grandfather to the mountains.'

644.2 The Instrumental Case {ni}. This case has no allomorphs. It is used as:

(1) the marker of the actual instrument, with the meaning 'by means of,' for example,

/nìk?ópam jáluluni sólti?ùsan./ 'My grandfather used to play on a flute.'

(2) a marker to express the idea 'with . . . as an ingredient' (although this concept may be differentiated from (1) above only in translation), for example,

/mym mahátim kakán wóleki láwani japém./ 'That bread is made with white man's flour.'

644.3 The Locative Case {di}. This case has no allomorphs.

/mydí/ 'there'

It is used as:

(1) a marker of static location in space, for example,

/homóndi makáde mínki hybóm./ 'Where is your house?'

(2) the marker for the space within which an action is carried out, for example,

/kulúdi kakas ?ynójbodùkkym./ 'I seldom walk around in the dark.'

(3) a marker of static location in time, for example,

/?ókmèndi jewéj?am./ 'He came back in the springtime.'

(4) a marker for the meaning of 'toward' rather than 'in.' In such usage, the allative case may always be substituted, for example,

/wédadi kakás ?ykójdom./ 'I'm going to the festival,' or

/wédana kakás ?ykójdom./ 'I'm going to the festival.'

644.4 The Allative Case {nak}. This case has the allomorphs ‖nak‖ $\overset{f}{\sim}$ ‖na‖. It is used as:

(1) the marker of the meaning of motion toward, for example,

/mym húskym ćájna lykkoj?am./ 'The snake crawled to another place (that is, away).'

(2) rarely, as a marker for the meaning 'for' in a special sense, for example,

/teté bodúkkas ka?apem tawálna./ 'I'm not big enough for that kind of work.'

644.5 The Ablative Case {nan}. This case has no allomorphs. It is used as:

(1) the marker for the idea of motion away from, for example,

/kulŭ ʔas jamánnan jewéjʔehes./ 'We came from the mountains yesterday.'

(2) a marker for the origin of an entity, with no concomitant idea of motion, for example,

/wólenan ʔas ʔuní méḱas./ 'I got this from the white man.'

644.6 The Indefinite Locative, {te}. This case has no allomorphs. It is of very restricted occurrence and is used as the marker for location totally unknown to the speaker, for example,

/homónte míńki waťá dákym./ 'Where is your dishtowel?'

/hesántedi pyjétodoj máḱade?es./ 'When shall we start swimming?'

/ʔántena póḱoj./ 'Wade off!'

644.7 The Linear Distributive {no}. This case has no allomorphs. It occurs rarely and is used as a marker for the meaning 'along' or 'alongside of'; it always occurs with nouns having the content 'object of linear form,' for example,

/ʔadóm ʔuním séwno mòmí kutídom ťúćikdom sèwi ʔódo tawálwonòm./ 'Then, draining out all the water along this river and damming up the river, they worked the gold.'

650. Substantive Expansions

Pronouns cannot be expanded; all substantive expansions are noun expansions. All noun expansions have one of the case endings as one of two basic constituents. The other constituent, always in prior position, is the rest of the expansion, including the base stem.

The attribute elements in a noun expansion always precede the base stem and are always marked by the modifying suffix $\{Im_2\}$ (except for the possessives in class D (651), which are marked by the possessive suffix). ($\{Im_2\}$ differs formally from $\{Im_1\}$, subject case, in that $\{Im_2\}$ has no morphological allomorphs.) There is theoretically no limit to the number of possible modifiers in a noun expansion, though, in fact, there are never more than four or five.

There are four order-classes of modifying stems in noun expansions, any one of which may provide a member (with the base stem and a case ending) to form a complete expansion. When more than one order-class member occurs, however, the sequence is fixed. A member of any one of the four classes, or any combination of them in the proper sequence, may occur without a base noun in immediate constituency with a case ending.

The four order-classes of modifiers are:

651. Demonstratives (D). These are of two types, on the basis of internal structure: Substantives in the possessive case, for example,

/wépaki/ 'Coyote's'

/mymýk/ 'his'

Demonstratives with the attributive suffix {Im_2}, for example,

/ʔuním/ 'this'

/ʔaním/ 'that'

/mým/ 'this; that'

/mỳjím/ 'this; that (person)'

Only one member of this class may occur in any given noun expansion.

652. Inherent Adjectives (Ad). This class has the construction aAd {Im_2}. aAd is a small class of seven members, but with two subclasses:

(a)	(b)
{teté} 'big'	{pí} 'many'
{jahá} 'good'	{pí} {lût'} 'a great many'
{wasá} 'bad'	{tibí} 'small'
	{tibí} {t'yt'y} 'small' (plural) (632)

These morphemes occur in immediate constituency with {Im_2}, that is, without {sa} and {pe} (see (3) below). The members of subclass (a) form adverbs with a special allomorph of {Nini}, namely ‖t‖ (742.1); members of class (b) do not occur in adverbial constructions. {tibí} is anomalous in its occurrence with {t'yt'y} with a plural meaning (632). {pí} is anomalous in its occurrence with {lût'} 'extremely' with the meaning 'a great many.'

Only one of these inherent adjectives may occur in any given expansion, except for the following two combinations:

/tetém jahám/ 'big good'

/tetém wasám/ 'big bad'

653. Derived adjectives (Q). These consist of:

Stem {sa} {Im_2} 'having the permanent or natural quality of,' for example,

{hútu} 'craziness' {sa} {Im_2}:

/hútusam/ 'crazy by nature,' 'insane'

Stem {pe} {Im_2} 'having the (momentary) quality of,' for example,

{hútu} {pe} {Im_2}:

/hútupem/ 'crazy (for the moment)'

Stem {sa} {pe} = stem {sa}, for example,

{hútu} {sa} {pe} {Im_2}:

/hútusapem/ = /hútusam/

There is presumably no structural limit on the number of Q's which may occur in a given expansion. No actual example from the corpus has more than two, however.

653.1 Derivations of Q. There are two derivative forms expressing the notions of 'extremely' (with {r}) and 'somewhat' (with {R}). The notion of 'extremely' occurs only with roots of the form CVC, for example,

{t́ês} 'shortness':

‖r t́ês pe Im‖ : /t́et́éspem/ 'extremely short'

‖t́ês R pe Im‖ : /t́ést̀èspem/ 'somewhat short'

{lâm} 'longness':

‖r lâm pe Im‖ : /lalám̀pem/ 'extremely long'

‖lâm R pe Im‖ : /lámlàmpem/ 'somewhat long'

For morphemes of other canonical form, only the 'somewhat' notion occurs. If the morpheme ends in a vowel, then {R} : ‖hR‖, as with

{ʔítu} 'sickness':

‖ʔítu hR pe Im‖ : /ʔítuhtuhpem/ 'somewhat sick'

If the morpheme is in the form CVCVC, then {R} : ‖r‖ and is infixed after the first vowel and before the second consonant, as with

{banák̀} 'brightness':

‖ba.$\overset{r}{\cdot}$.nák pe Im‖ : /banánàkpem/ 'somewhat bright'

There is no attestation of forms with {R} or {r} for roots of the shape CVCCVC.

The stem /kylókbe-/ 'old woman' has a uniquely formed 'somewhat' derivative:

/kylókbepem/ 'old (of women)'

/kylókbekbepem/ 'elderly (of women)'

653.2 Expansions of Q. The class Q may be expanded in two ways: by means of adverbial modifiers (842.1) and by means of nouns in the object case in prior position, for example,

‖jálulú I+sôl ti pe Im‖ : /jálulù sóltipem/ 'flute-playing'

‖pân I+nîḱ+mêj pe Im‖ : /pàní níḱ méjpem/ '(a) tobacco-me-giving (one)'

654. Attributive with ST (AN). This class has the construction ST $\{Im_2\}$ (where ST is any semantically appropriate stem). The largest attested number of these in a single noun expansion is three:

‖pân Im+bîs Im+jamán Im+pakán‖ : /pàním bìsím jamánim pakán-/ 'Tobacco Dwelling Mountain Pool' (here quoted with no case ending; see 750.)

660. Summary of Substantive Constructions

In the formulas which follow, symbols for constructions are on the left, separated by a colon from the constituents on the right; the latter are written without any intervening symbol. Similarly, symbols for classes are on the left, separated by a colon from the members on the right; the latter are written with intervening plusses. Parentheses group members of classes or constituents of constructions together; square brackets mark optional constituents in constructions. An item followed by ... indicates that a structurally indefinite number of such items may occur in sequence.

This section summarizes the preceding discussion of substantives and defines the external distribution classes S, O, L, and Po adumbrated in Section 400.

nN = expanded noun stem:

nN: [D] [Ad] [Q] ... [AN] ... ST [{ċo} + {cy} + {ṫyṫy}]

Reference: 650 (note that minimally nN = ST)

Example:

D		Ad		Q		
{ʔaníˊ}	{Im_2}	{teté}	{Im_2}	{bodúk}	{pe}	{Im_2}
‖ ʔaní	Im +	teté	Im +	bodúk	pe	Im +
/ ʔanímˊ	+	tetémˊ	+	bodúkpem		+
that		big		deep		
AN		ST				

{jamán}	{Im_2}	{pakáˊn}
jamán	Im +	pakáˊn ‖
jamánim	+	pakáˊn- /
mountain		pool

pP = pronoun stem:

pP: (({nîˊk} + {mínˊ} + {mýˊ})[{ċo} + {cy}]) + {máj} ({ċo} + {cy})

Reference: 620

sS = substantive stem:

sS: nN + pP

nNl = locative noun suffixes

nNl: {ˊkan} + {ni} + {di} + {nak} + {te} + {no}

Reference: 644

S: sS {Im_1}

Reference: 641.

Example: sS {Im_1}
{nîḱ} {ćo} {Im_1}
‖ nîḱ Xsa Im ‖
/ nìsám /
we two

O: sS {I}
Reference: 642.
Example: sS {I}
{mín} {I}
‖ mín Ø‖
/ mín /
thee

L: sS nNl
Reference: 644.
Example: sS nNl
{hybó} {di}
‖ hybó di‖
/ hybódi /
in the house

Po: sS {Iḱ}
Reference: 643.
Example: sS {Iḱ}
{wépa} {Iḱ}
‖ wépa k ‖
/ wépak /
Coyote's

700. THE VERB

The verb consists maximally of a theme and five inflectional suffixes, for tense, aspect, mode, person, and number. There is considerable variability in the ordering of these elements. The verb suffixes, along with the noun suffixes for the subject, object, and possessive cases, constitute the oldest inner layers of Maidu structure.

In the sections which follow, the verb stem (710) and verb theme (720) are described; the five modes (indicative, subjunctive, optative, interrogative, and gerundial) are arbitrarily adopted as referents for an examination of the inflectional paradigms (730). Finally, the two uninflected verb sets, the participles and the imperatives, are described (740).

710. Verb Stems

As has been mentioned earlier (400), the stems which occur in major form-class constructions are multivalent. Thus the terms 'noun stem' and 'verb stem' are structurally indefensible. However, many stems (particularly polymorphemic ones) are commonly found in constituency with the suffixes marking substantives or with those marking verbs. This impressionistic dichotomy is of practical importance in the language and is utilized in the present description.

In the following statements those verb stems which are written with a hyphen are phonemic.

711. Monomorphemic stems. Roots of all canonical forms are found as verb stems, that is, in constituency with the elements described in Sections 720 and 730 below, for example,

{sôl} sól-, sòl-	'sing'
{mé} mé-	'take'
{dúpe} dúpe-	'be cold'
{nenó} nenó-	'be old'
{ċe.ˊ} ċe.ˊ-	'see'
{ʔítus} ʔítus-	'roast'
{jahá} jahá-	'like, want to'
{ċukút} ċukút-	'wash'

{ka.ˊ} 'to be' is unique, with two allomorphs distributed as follows:

‖ka.ˊ‖ with the present-past and past-habitual indicative (732):

nì ka'kás mínki héskym. 'I am your friend.' wédam ʔokmèndi ka'ʔúsan. 'The weda used to be in spring.'

‖ma.ˊ‖ with all other verb paradigms:

homónim ma'kade mým. 'Who is this?' bének ní hỳbódi mamá'kas. 'I'll be at home tomorrow.'

712. Compound stems. A compound stem is a combination of two or more roots. Most of these roots occur elsewhere as verb stems, noun stems, or both, but a few occur only in combinations. The following types occur:

(a) Those stems in which both elements are identifiable and in which the first element is commonly found elsewhere in noun constructions, for example,

‖pân‖ 'tobacco'	‖pe.ˊ‖ 'to eat' : pánpe.ˊ- 'to smoke (tobacco)'
‖k'âw‖ 'dirt'	‖bá‖ 'to dig' : k'àwbá- 'to dig a hole'
‖ċí‖ 'clothing'	‖wiʔí‖ 'to lack' : ċíwiʔì- 'to be naked'
‖ʔêk‖ 'daytime'	‖pe.ˊ‖ 'to eat' : ʔékpe.ˊ- 'to have lunch'

(b) Those stems in which both elements are identifiable and in which the first element is commonly found elsewhere in verb constructions, for example,

‖t́ík‖ 'to have enough' ‖ć e.ʹ‖ 'to see' : t́íkć e.ʹ- 'to believe'
‖sôl‖ 'to sing' ‖ʔidí‖ 'to perform together' : sólʔidì- 'to sing along with'

(c) Those stems in which the first element is unidentifiable, for example,

/bók/ ? ‖wéje‖ 'to talk' : bókwèje- 'to invoke'
/wém/ ? ‖t́ík‖ 'to have enough' : wémt́ìk- 'to have enough'

(d) Those compound stems with a disyllabic auxiliary verb as second member. There are many disyllabic stems which may be put into a small number of subgroups on the basis of identical initial unstressed CV. Each group thus obtained has, for some of its members, a common semantic identity, fairly easy to 'feel' but often difficult to define. The second syllables of such stems are usually unique to individual stems, but not always. In a few cases, the second syllable is identifiable as one of the motion-location auxiliaries (723), making it necessary to identify the first syllable as a root morpheme. Both Dixon (BAE Bulletin 40, Vol. 1, p. 693 ff.) and Uldall (MS grammar) classify these first syllables as prefixes. The present writer is inclined to the view that these are root morphemes of the CV.ʹ type. The problem is, at least in part, a historical one and is excluded from the present description.

All of the free auxiliary verbs apparently belong to the class of stems discussed above, for example,

bodúk-	'be rather ..., be not very ...'
boḱój-	'fail to ...'
potó- f̰ pytó-	'be almost ...'
webís-	'to finish ...'
weḱój-	'seem to be ...'
wihá-	'... by leading'
wiḱá-	'hold and ...'
wiḱój-	'fetch and ...'
wojé-	'get to be ...'
ʔisá-	'habitually ...'

Some examples of these compound stem types in context are:

/kylóknonom ʔas sólweḱòjḱan./ 'Women seem to be singing.'
/ʔyḱójwebìsć et, sewdi ʔydíknoć òjʔam./ 'As they were in the act of going they came to a river.'
/ní ʔas hínḱojpotòʔas./ 'I almost floated away.'
/mym mòmím ʔas bodúkbodùkḱan./ 'This water is not very deep.'

/kulúwojèćet, ma?át ?okítmàǩan./ 'When it gets to be dark, he'll probably arrive.'

(e) Those compounds which have as first member the morpheme {?y.ː} and as second member one of a restricted class of morphemes all but one of which have a lexical meaning involving motion. {?y.ː} serves a purely structural, nonsemantic function. The class of second members has a double privilege of occurrence: here, and as the third position class of thematic suffixes. A complete list of them is given in the appropriate section under verb themes (713.3). Some examples are:

{?y.ː} {ǩoj} : ?yǩój- 'go'
{?y.ː} {je} : ?yjé- 'come'
{?y.ː} {no} : ?ynó- 'go, walk'

In some cases, combinations of more than one second member occur, for example,

{?y.ː} {no} {je} : ?ynójе- 'wander about'
{?y.ː} {ćo} {no} : ?yćóno- 'go over (a mountain)'

Three members of the present second-position class have no privilege of occurrence as thematic suffixes:

{dem} : {?y.ː} {dem} {ťa} : ?ydémťa- 'come upon suddenly by accident'
{hej} : {?y.ː} {hej} : ?yhéj- 'accompany'
{lem} : {?y.ː} {lem} : ?ylém- 'hurry by'

720. The Verb Theme (VT)

Verb themes are the result of the combination of stems with one or more thematic suffixes. These latter occur in six position classes:

{ti}	causative suffix
((?us))	suffixes having to do with the designation of a verbal object
MLA	the motion-location auxiliaries
{men}	negative suffix
((bós))	aspectual suffixes
((ćoj))	evidential suffixes

These classes are all optional, that is,

VT = verb theme

VT : ST [{ti}] [((?us))] [MLA] [{men}] [((bós))] [((ćój))]

Reference: 660.

A detailed description of each of these classes follows.

721. The Causative Suffix, {ti}. This is represented by a single morph. It is of common occurrence, both in frozen expressions like wónoti- 'to

kill,' literally, 'to cause to die,' and freely to express a causative idea, for example,

/má dóndom ?as té ?ynótiǩas./ 'I walked the child, holding his hand.', lit., 'I caused the child to walk, holding (his) hand.'

/?amám tetét jahát dótipem maháti pe?úsa?es./ 'Then we used to eat delicious acorn bread.', lit., 'Then very-well-cause-to-taste acorn bread we used to eat.'

/?adóm tibíbitidom wijýlǩan./ 'Then he cut it to bits.', lit., 'Then he cut (it), causing it to be in many small pieces.'

722. The ((?us)) Class. This consists of five suffixes with meanings concerned with the nature of the verbal object. These suffixes are:

{?us}, reflexive:

/níkposìm ?as kulú wónoti?us?am./ 'My cousin killed himself yesterday.'

{jo}, plural objects; also, repetitive actions:

/ċáni májse ?onó wójomàǩas./ 'I'm going to hit them (one after another) on the head with a stick.'

/húmbotmènwet ?as ǩapóljoǩas./ 'I kept on shoving anything in (the sack).'

/hésbojojo kaǩán hésbopajdom./ 'She's packing up various things.' (Here the suffix occurs in a noun construction, included in order to demonstrate its semantic range. Most uninflected forms are similarly multivalent.)

{to}, a common suffix, obscure in meaning:

/jú-/ 'rub on,' /júto-/ 'rub in'

/japáj-/ 'show, demonstrate,' /japájto-/ 'talk to'

/méj-/ 'give,' /méjto-/ 'buy'

/mé-/ 'take,' /méto-/ 'buy'

In most instances, {to} seems to function as a kind of transitivizer:

/mym májdyċom hómpajtoǩan./ 'Those two men are fighting.'

But often there does not appear to be any transitive meaning:

/ǩódom kaǩán jatnájtodom./ 'The earth is trembling.'

{totó} always expresses reciprocal action. It may be a reduplication of {to}:

/nisáwet japájtotòpy?y./ 'Let's us two talk to each other.'

723. The Motion-Location Auxiliaries (MLA). In addition to their occurrence in the third position class of thematic suffixes, these also combine with a prior morpheme {?y.ˊ} to form the common verbs of motion—'come,' 'go,' and the like (712 (e)).

There are sixteen members of this class, all but one of which bring some incremental special meaning of motion to the basic stem (the exception is {ťa} 'on top of'). They are:

	Meaning:	Examples:
{ćik}	Over or into with the feeling of covering over or closing.	/pűćik-/ 'to swell shut' /kájćik-/ 'to fly into' /hínćik-/ 'to float over and cover'
{ćo}	Up over the edge of something, around from behind.	(only in combination; see below)
{daw}	Down and away with no interest in the goal of movement.	/látdaw-/ 'to drip away' /héjudaw-/ 'to fall off'
{dik}	Up to and into a goal or objective.	(only in combination; see below)
{doj}	Upward.	/welédoj-/ 'to run up' (for example, a hill)
{je}	Hither.	/ćejé-/ 'to look hither' /weléje-/ 'to run hither'
{kit}	Downward. (Also figuratively)	/penýkit-/ 'bend down under weight'
{ḱoj}	Away from here, thither.	/lýkḱoj-/ 'to crawl away' /halápḱoj-/ 'to drag (something) off'
{lek}	Hurriedly.	/wilék-/ 'to hurry up' (rare)
{mit}	Onto or into with a further idea of downward motion.	/wydýmmit-/ 'to throw (something) downhill'
{n}	Downstream, downhill; therefore, in Maidu terms, usually in a southwest direction.	(only in combination; see below)
{no}	Along, general motion without implication of dirrection or attitude.	/weléno-/ 'to run along' /lýkno-/ 'to crawl along'
{paj}	Against, but usually in a rather figurative sense.	/jodótpaj-/ 'to tie up' /háspaj-/ 'to urinate against (in the canine manner)' /hómpaj-/ 'to fight' (as a single person) /ćópaj-/ 'to flare up' (as a fire)

	Meaning:	Examples:
{pin}	Hither, but without implications in regard to goal.	/tý́ppin-/ 'to jump in this direction'
{sip}	Out of.	/t́úpsip-/ 'to spit out'
		/sáwsip-/ 'to leaf out'
{t́a}	On top of.	/lý́kt́a-/ 'to ride (a horse)'
		/bént́a-/ 'to step on'
{waj}	Apart.	/jytý́jwajto-/ 'to rip apart'

These motion-location auxiliaries also occur together in certain restricted sequences:

	Meaning of Combination	Examples:
{ć́o} {pin}	Up over the edge and hither.	/ʔylékwoć́ópin-/ 'hurry up over and hither'
{ć́o} {no}	Over the edge of something; in a circle.	/ḱý́ć́ono-/ 'sink (as the sun)'
{no} {je}	Aimlessly.	/welénoje-/ 'run here and there aimlessly'
{sip} {pin}	Out of and hither.	/lý́ksippin-/ 'crawl out here'

Some of these motion-location auxiliaries require special statements:

{no} is one of the most frequently occurring morphemes in Maidu. It is used invariably whenever there is the slightest implication of motion in the meaning of the verb. In the majority of such cases, {no} adds little to the meaning, but stems containing it are always characterized by Maidu speakers as being in much better style. For example, /welé-/ 'run' is adequate, and the meaning is clear, but /weléno-/ 'run' is the form which almost always occurs. There are also some morphemes which never occur without {no}, even though the meaning would be perfectly clear: nénno- 'change place of residence,' but *nén- is not used.

{n} has allomorphs as follows:

{n}	‖ ʾIn‖ :	/lý́ḱýnno-/	'crawl down'
		/tý́ṕín-/	'jump down'
		/bónno-/	'hurl downwards'
	‖ ʾIt‖ :	/sohátno-/	'carry someone downhill'

The following pair is also found:

ʔýnno- $\overset{f}{\sim}$ ʔýtno- 'to go down, descend'

{doj}, {kit}, {ǩoj}, {mit}, and {paj} have CV allomorphs before {nú}, durative aspect (725), for example,

{bý́} {doj} {nu} : ‖bý́ do nù‖ 'stick up (like hair)'

{ʔetáp} {kit} {nú} : ‖ʔetáp ki nù‖ 'shut up, stop talking'

{ć́e.ː́} {ǩoj} {nú} : ‖ć́e.ː́ ǩo nù‖ 'stare off into space'

{ć́e.ː́} {mit} {nú} : ‖ć́e.ː́ mi nù‖ 'gaze into'

{dák} {paj} {nu} : ‖dák pa nù‖ 'be stuck to'

{sip} has a CV allomorph before {to}, reciprocal (?) (713.2), for example,

{tŷp} {sip} {to} : ‖tŷp si to‖ 'jump across'

724. The Negative Suffix, {men}. Negation in the verb is expressed by means of a single suffix with two phonological variants:

{men}	‖men‖ :	/men/ after C, for example, kylóknonòm ʔas wetémmenʔùsan. 'The women didn't use to dance.'
		/n/ $\overset{f}{\sim}$ /men/ after V, for example, moménma?àmkano. $\overset{f}{\sim}$ mónma?àmkano. 'You won't

It is to be noted here that ‖mo.ː́ men‖ : /món-/ $\overset{f}{\sim}$ /moménː/. This situation is of interest because it is the only one in the language in which the primary stress of a delayed-stress verb root occurs on the root itself at the phonemic level.

725. The ((bós)) Class. This includes six suffixes with aspectual meanings:

{bós}, completive, for example,

/wéjebòsǩas./ 'I'm through talking.'

/mym majdym kúsubòsǩan./ 'That man is completely blind.'

{ć́ýj}, 'unable,' for example,

/hybónan jýsipć́ỳjǩas./ 'I can't get out of the house.'

{dój}, inchoative, for example,

/nìǩí lenóm ʔas jótitdòjdom kaǩán./ 'My garden is beginning to bloom and get green.'

{nú}, durative, for example,

/ʔyswálulùm ć́eǩónùdom, wéjemenʔam./ 'The devil, continuing to look into space, said nothing.'

{tí}, 'for the sake of,' for example,

/ć́ùṕé hýǩojtìp mym kylé./ 'Go pick some willow for that woman.'

{béw}, 'a little more . . .,' for example,

/mym ṕybem ʔas lalámbèwǩan./ 'That boy got a little taller.'

726. The ((ć́ój)) Class. This includes three suffixes which include various notions as to the nature of the evidence:

{ć́ój}, quotative, for example,

/mym májdyk mykótòm ʔać́ójʔam./ 'It was that man's grandmother, it is said.'

{wéw}, evidential, for example,

/homónim mawéwḱa./ 'Who can you be?' (With the notion that if I look at you and think for a moment, I'll remember.);

/mym ṕýbeć́om ʔas ʔydójwèwḱan./ 'Those two boys are apparently coming up (here).'

{ký}, 'seems to me,' for example,

/hés hútutini wéjepem kakýḱan./ 'How crazily he seems to talk!'

730. Verb Inflection

The inflectional elements of the verb are presented paradigmatically. Although the morphemes for number and person occur finally (except with gerundials), they are described first; their allomorphy is based on their occurrence with the various paradigmatic sets.

731. Number and Person. The first person is marked for singular, dual, and plural. In the second and third persons, number is unmarked. In the chart which follows, number and person allomorphs are given in combination:

Morphemes:			Allomorphs:					
			I	II	III	IV	V	VI
1S	{ʼÍ}	{s}	ʼÍ s					
1D	{ḣa}	{s}	ḣa s					pyʔy ∅
1P	{ḣe}	{s}	ḣe s					peʔe ∅
2	--	{ano}	ano		nim	nHʔH	∅	nHʔH
3	--	{n}	n	m	∅			

{s}, first person, has a phonological free variant /sí/ before /./.

These allomorphic sets are distributed as follows:

I with all indicative paradigms except the past punctual; with all subjunctive paradigms (732, 733);

II with the indicative past punctual (732.4);

III with the ((myni)) class (739.1);

IV with the monitive optative (734.1);

V with the interrogative (735);

VI with the hortatory optative (734.3).

732. The Indicative Mode. This mode is marked by {ˈæ}. It covers actual events in the past or present and direct statements of intention in the future. The sequence of suffixes for the indicative is as follows: verb theme (VT), tense (T), aspect (A), mode (M), number (N), person (P).

732.1 The Present-Past Indicative. This is the paradigm of greatest frequency, particularly with {ka.ː} 'be.' A summary follows:

VT	T	A	M	[N] P
	∅	{k}, neutral aspect.	{ˈæ} : ‖ˈæ‖ with 1S and 3 ‖ʔáem‖ with 1D, 1P, and 2	I

The morphemes for aspect and for mode occur metathesized in 1D and 1P and in 2.

An example based on {sôl} 'sing; song' is:

1S ‖sôl k ˈæ ˈÍ s ‖ : /sólḱas/ 'I sang'

1D ‖sôl ʔáem k ḥa s ‖ : /sólʔàmḱas/ 'we two sang'

1P ‖sôl ʔáem k ḥe s ‖ : /sólʔèmḱes/ 'we all sang'

2 ‖sôl ʔáem k ano‖ : /sólʔàmkano/ 'you sang'

3 ‖sôl k ˈæ n ‖ : /sólḱan/ 'he, she, they sang'

The present-past forms of {ka.ː} 'to be' are regular in deliberate speech, but such forms are by no means the commonest. Various degrees of phonetic reduction occur, mainly by the substitution for intervocalic /ʔ/ of a kind of hiatus between two peaks or chest-pulses. This hiatus is represented in the forms below by writing two vowels together. Three levels of reduction may be described:

	full form	reduction 1	reduction 2	reduction 3
1S	/kaḱás/	/kaʔás/	/kaás/	/ḱas/
1D	/kaʔámḱas/		/kaámḱas/	
1P	/kaʔémḱes/		/kaémḱes/	
2	/kaʔámkano/		/kaámkano/	
3	/kaḱán/	/kaʔán/	/kaán/	/ḱan/

The full forms, the forms of reduction 1 and the forms of reduction 2 are all common variants. The forms of reduction 3 are restricted to occurrences of {ka.ː} in periphrasis (739.3).

The present-past is used:

(1) To describe a recently completed punctual action, but only if the context in which that action occurred persists at the time of speech. It

is never used to describe events from the previous day; the passing of a night is conceived as an inevitable change of the context, for example,

/nìsém ʔas sólʔèmḱes./ 'We all sang a song (just now).'

(2) To describe some punctual action which is taking place at the time of speech. The greatest difference between this usage and the one above is in the translation, for example,

/homónimwet ʔylékwoćòpinḱan ʔaním ḱýsdi./ 'Someone (at this moment) is coming over (or just came over) that ridge.'

(3) To express a state of being at the time of speech, for example,

/hálćeḱàs mín./ 'I don't believe you.'

With {ka.ː}, 'be,' the present-past is used:

(4) To express the sense of an equation, for example,

/mym wólem májdym kaḱán myḱí jèpím./ 'That white man is her husband.'

(5) To express the idea of present static location, for example,

/pím májdym kaḱán hybódi./ 'A lot of people are in the house.'

(6) To form periphrastic paradigms (739.3).

732.2 The Future Indicative. This paradigm is identical in form to the present-past except that the future tense morpheme {má} occurs immediately following the theme. An example with {sôl} is:

1S	/sólmàḱas/	'I will sing'
1D	/sólmàʔàmḱas/	'we two will sing'
1P	/sólmàʔèmḱes/	'we all will sing'
2	/sólmàʔàmkano/	'you will sing'
3	/sólmàḱan/	'he, she, it, they will sing'

The future paradigm of {ka.ː} employs the allomorph ‖ma.ː‖ (711):

1S	/mamáḱas/	'I will be'
1D	/mamáʔàmḱas/	'we two will be'
1P	/mamáʔèmḱes/	'we all will be'
2	/mamáʔàmkano/	'you will be'
3	/mamáḱan/	'he, she, it, they will be'

This paradigm is used:

(1) To describe definite punctual action in future time, for example,

/hésmèn ʔékdajèćet ʔynódojmàʔèmḱes./ 'We're all going to start out at dawn'

(2) To serve as a kind of directive or mild imperative (with the second person only), for example,

/húmbotmènwet sólmàʔàmkano./ 'Just keep on singing,' lit., 'You will sing anything at all.'

732.3 The Habitual Past Indicative.

VT	T	A	M	[N] P
	{ʔ} past	{ús} habitual	{ʼæ} indicative, with allomorph ‖a‖	

An example based on {wéje}, 'talk,' is:

	VT	T	A	M	N	P		
1S	‖wéje	ʔ	ús	a	ʼÍ	s ‖	:	/wéje?ùsas/ 'I used to talk.'
1D	‖wéje	ʔ	ús	a	h́a	s ‖	:	/wéje?ùsahas/ ~ /wéje?ùsa?as/ 'we two used to talk'
1P	‖wéje	ʔ	ús	a	h́e	s ‖	:	/wéje?ùsahes/ ~ /wéje?ùsa?es/ 'we all used to talk'
2	‖wéje	ʔ	ús	a	ano‖		:	/wéje?ùsano/ 'you used to talk'
3	‖wéje	ʔ	ús	a	n ‖		:	/wéje?ùsan/ 'he, she, they used to talk'

The meaning of the paradigm is 'habitual action in the past,' for example,

/pénem níkkotòcom ʔyhéjʔùsan./ 'My two grandmothers used to go along.'

732.4 The Past Punctual Indicative.

VT	T	A	M	[N] P
	{ʔ} past	∅	{ʼæ}	II

An example based on {sôl} is:

	VT	T	M	N	P		
1S	‖sôl	ʔ	ʼæ	ʼÍ	s ‖	:	/sólʔas/ 'I sang'
1D	‖sôl	ʔ	ʼæ	h́a	s ‖	:	/sólʔahas/ ~ /sólʔaʔas/ 'we two sang'
1P	‖sôl	ʔ	ʼæ	h́e	s ‖	:	/sólʔehes/ ~ /sólʔeʔes/ 'we all sang'
2	‖sôl	ʔ	ʼæ	ano‖		:	/sólʔano/ 'you sang'
3	‖sôl	ʔ	ʼæ	m‖		:	/sólʔam/ 'he, she, they sang'

The past punctual is comparatively rare. When used, it refers to single acts in the past and is disconnected from the context of the present moment, for example,

/ʔunídi ʔas wépam welésitoʔam./ 'Here's where the coyote ran across.'

733. The Subjunctive Mode. The one subjunctive paradigm is restricted in occurrence to two stem morphemes: {jâk}, 'resemble,' and {ná}, 'result in.' The paradigm occurs only as an auxiliary verb in periphrasis; its usage is described in 741.2.

{jâk}	-- --	{ḱe} : ‖ḱe‖	I
{ná}		{ḱe} : ‖će‖	

A sample paradigm based on {jâk} is:

	S	M	N	P		
1S	‖jâk	ḱe	ʼI	sí ‖	:	/jákḱes/ 'I seem to be'
1D	‖jâk	ḱe	ḣa	sí ‖	:	/jákḱehas/ $\overset{f}{\sim}$ /jákḱeʔas/ 'we two seem'
1P	‖jâk	ḱe	ḣe	sí ‖	:	/jákḱehes/ $\overset{f}{\sim}$ /jákḱeʔes/ 'we all seem'
2	‖jâk	ḱe		ano‖	:	/jákḱeno/ 'you seem'
3	‖jâk	ḱe		n ‖	:	/jákḱen/ 'he, she, it, they seem'

734. The Optative Mode. The morpheme {b} marks the optative, which has the following sequence: stem (S), mode (M), aspect (A), number (N), person (P). There are three paradigms. Two have forms for all persons; the third has forms for the first person only.

734.1 The Monitive Optative.

VT	M	A	[N] P
	{b}	{yʔy} 'monitive' : ‖y‖ with 1D, 1P, 2; ‖yʔy‖ $\overset{f}{\sim}$ ‖y‖ with 1S, 3.	IV

An example with {wóno}, 'die,' is:

1S ‖wóno b yʔy ʼÍ s‖ $\overset{f}{\sim}$ ‖wóno b y ʼÍ s‖ : /wónobyʔys/, /wónobys/ 'I might die'

1D ‖wóno b y ḣa s‖ : /wónobyhas/ $\overset{f}{\sim}$ /wónobyʔas/ 'we two might die'

1P ‖wóno b y ḣe s‖ : /wónobyhes/ $\overset{f}{\sim}$ /wónobyʔes/ 'we all might die'

2 ‖wóno b y nHʔH‖ : /wónobynyʔy/ 'you might die'

3 ‖wóno b yʔy ∅ ‖ $\overset{f}{\sim}$ ‖wóno b y ∅‖ : /wónobyʔy/, /wónoby/ 'he, she, it, they might die'

This paradigm has the meaning: 'possible future event of an unpleasant or undesirable nature,' that is, some idea of warning or threat is usually implied, for example,

/húskym mín dóbyʔy./ 'A snake might bite you.'

734.2 The Intentive Optative. Forms exist only in the first person:

VT	M	A	[N] P
	{b}: ‖∅‖ with 1S; ‖b‖ with 1D, 1P	{æ}: ‖∅‖ with 1S; ‖æ‖ with 1D, 1P	IV

An example with ‖ʔy.ˊǩoj‖ 'go' is:

1S ‖ʔy.ˊǩoj ∅ ∅ ˊÍ síˊ‖ : /ʔyǩójʔìs/, etc. 'I'm going to go'
1D ‖ʔy.ˊǩoj b æ ĥá síˊ‖ : /ʔyǩójbaʔas/, etc. 'we two are going to go'
1P ‖ʔy.ˊǩoj b æ ĥe síˊ‖ : /ʔyǩójbeʔès/, etc. 'we all are going to go'

Singular forms are very common, but dual and plural forms are rare:

/nìkíˊ héskyk hybóna ʔyǩójʔès./ 'I'm going to go to my friend's house.'

Sometimes the intentional is used with demonstrative or interrogative words to form questions requesting instructions:

/ʔunína haj sówokìtʔìs./ 'May I set it down here?'
/homóndi ʔuníˊ sówokìtbahàs./ 'Where shall we set this down?'
/hèsíˊ wéjebehès./ 'What are we going to say?'

734.3 The Hortatory Optative. This paradigm is of extremely common occurrence.

VT	M	A	[N] P
	{b}: ‖b‖ with 2 ‖t‖ ---	{á} ‖é‖ with 2 ‖á‖ ---	VI

An example with ‖ʔy.ˊǩoj‖ 'go' is:

	VT	M	A	N	P		
1S	‖ʔy.ˊǩoj	t	á	ˊÍ	s ‖	:	/ʔyǩójtàs/, etc. 'let me go'
1D	‖ʔy.ˊǩoj	t	á	py?y	∅‖	:	/ʔyǩójtàpyʔy/, etc. 'let's the two of us go'
1P	‖ʔy.ˊǩoj	t	á	peʔe	∅‖	:	/ʔyǩójtàpeʔe/, etc. 'let's all of us go'
2	‖ʔy.ˊǩoj	b	é	nHʔH	‖	:	/ʔyǩójbènеʔe/, etc. 'let you go'
3	‖ʔy.ˊǩoj	t	á	∅	‖	:	/ʔyǩójtà/ 'let him, her, it, them go'

A freely varying short form of 1D and 1P often occurs, lacking the mode and aspect morphemes: /ʔyǩójpyʔy/ 'let's the two of us go' and /ʔyǩójpeʔe/ 'let's all go.'

735. The Interrogative Mode. Except as noted in 734.2 above, all questions are in the interrogative mode, marked by {ǩade}.

VT	M	[N] P
	{ǩade} : ‖ǩa‖ with 2 ‖ǩade‖ ---	V

Example with {sôl} 'sing':

	VT	M	N	P	
1S	‖sôl	ǩade	ʼÍ	s‖	: /sólǩades/, etc. 'am I singing?'
1D	‖sôl	ǩade	ńá	s‖	: /sólǩadehàs/, etc. 'are we two singing?'
1P	‖sôl	ǩade	ńé	s‖	: /sólǩadehès/, etc. 'are we all singing?'
2	‖sôl	ǩa		∅‖	: /sólǩa/ 'are you singing?'
3	‖sôl	ǩade		∅‖	: /sólǩade/ 'is he, she, it, they singing?'

It is only when a general question is asked, without implications of time, that the interrogative occurs in its simplest form, for example,

/hesáwinim ċánan maǩáde./ 'What kind of tree is it from?'

In all other uses, various periphrastic elements occur (741.3).

736. The Imperatives. There are several structural devices for making directive statements. One has been discussed in 734.3; another is described in 741.4. In addition, there are two imperative morphemes in constituency with the theme or (in rare instances) with an inflected noun.

736.1 Imperative I, {pi}. This is used when the action of the order is to be carried out in the presence of the speaker or when there is no interest in the place of the ordered action:

‖pi‖	C-- : /pi/	sólpi.	'Sing!'
	V--.: /pi/ $\overset{f}{\sim}$ /p/	wéjepi. $\overset{f}{\sim}$ wéjep.	'Speak!'
$\overset{f}{\sim}$			
‖∅‖	all environments	sól.	'Sing!'
		wéje.	'Speak!'

Usage:

/bá ník sójep./ 'Pass me the salt!'

/ċenópi. kaǩás wetémdom./ 'Look! I'm dancing.'

/sól. sól. nìsém kaʔèmǩes pínǩenùdom./ 'Sing! Sing! We're listening.'

736.2 Imperative II, {padá}. This is used when the ordered action is to be carried out in the absence of the speaker. The morpheme has a single shape. Usage:

/nìǩí hybóna ʔydíknowetèn, bydójkitwetèn, bíjam mopádà./ 'When you have gotten to my house and have sat down, drink a beer!'

/mymýk púlkydi dákpajtipadà./ 'Stick it on his door!'

737. {wonò}. 'Long ago, but in my lifetime or that of my parents, etc.,' for example,

/nìk?ópa nìkkotóc̀okan ?as nìktyníḱan ?yhéjàswonò./ 'My little brother and I used to go along with my grandfather and my two grandmothers.' (lit., 'Along with my little brother, we two used to go along with . . .')

738. {pa?áje}. 'Long ago in ancient or mythical times; long before my time,' occurs sometimes in the position of the ((c̀ój)) class (726), but in constituency only with the present-past indicative (732.1). In such cases, the shape is ‖pa?áje‖ ~ ‖pa?áj‖. More commonly, {pa?áje} is in final position with no marker for number or person. These two constructions vary freely with one another, with no difference in meaning, for example,

/wólem kylém bej, wasá húwèjepa?àjḱan./ 'The woman was thinking bad (things) long ago (before I was born).

/tetét wasám wólem kylém mapá?àje./ 'She was a very bad white woman (long ago before I was born).'

739. Dependent Verb Constructions.

739.1 The ((myni)) Class. This consists of two morphemes forming dependent verbs:

VT	N P	((myni))
	III	{myni} 'if'
		{c̀et} 'although,' etc.

{myni} 'if,' 'when,' 'as soon as,' for example,

/ní wéjesmyni, mí papélbène?e./ 'When I say it, you write it down'

/wépam tetét wo?ómyni, kaḱás wisétmàpem./ 'As soon as the coyotes howl, I become frightened.'

/mí makó wótinìmmyni, ní ḱáptimàḱas./ 'If you catch the fish, I'll cook them.'

{c̀et} 'although,' 'at the moment that,' 'while,' 'whatever,' for example,

/sykálamennìmc̀et, ka?ájḱan./ 'Although you were not bothering him, he said (that you were).'

/tetét wo?óc̀et, kaḱás wisétmenmàpem./ 'No matter how much they howl, I don't get frightened.'

/hèsí ?as wéjesc̀et, kaḱán núkmàpem./ 'Whatever I say, he laughs.'

The resultant constructions are dependent verbs.

The formal resemblance of {wet} to {wetèn} is obvious. Also, there is a morpheme {jaťá} 'former, deceased.' The possibility of segmenting

{jaťàn} into {jaťà} and /n/, and {wetèn} into {wet} and /èn/ presents itself. However, the elements /n/ and /èn/ are unique and cannot be assigned a meaning. The solution chosen is to leave the two partially similar formal-semantic pairs intact:

{jaťá} and {jaťàn}

{wet} and {wetèn}

739.2 The ((wet)) Class. This group consists of three postfixes which occur with uninflected verb forms.

{jaťán} 'having previously,' for example,

/ʔaćet, myjím hóhlam májdym sóljaťàn, jómćòjʔam./ 'Whereupon, Badger, having previously sung, doctored (her).'

{wetén} 'as soon as,' 'having just,' for example,

/pósipwetèn, ʔyḱójʔàmḱas./ 'As soon as we had waded out, we two went away.'

{wet} 'although,' for example,

/hatámʔynòjewet, ćeménćòjʔam./ 'Although he went around searching, he didn't see (him).'

739.3 {dom} '-ing.' This is of common occurrence. There are two syntactic situations:

(a) Verbs with {dom} used as participles and occurring in constructions with or without {ka.ˊ} 'be,' for example,

/ní ʔas pedóm kaʔás./ 'I'm eating.'

/wépam, wéjemenwet, ćeḱónudom./ 'Coyote, saying nothing, (was) looking off into the distance.'

(b) Verbs with {dom} used in subordinate clauses, thus overlapping with the ((wet)) class:

/wetémdom, sóldom, májsem ʔyjéʔam./ 'Dancing, singing, they all arrived.'

740. Expansions of the Verb

These are of two types.

741. Periphrasis. There are three tactic verb constructions, each structurally unlike the others, which must be described one by one.

741.1. The Periphrastic Remote Past Punctual. {kyʔým} + the past punctual of {ka.ˊ} 'be' is used for remote past punctual time within the speakers lifetime, for example,

/tibím kylém pýbem kyʔým maʔás./ 'Long ago I was a little girl.'

This construction may function as the auxiliary to any verb theme (that is, stem + {kyʔým} + past punctual of {ka.ˊ}), for example,

/nìkbéḱym kíwdi túj ky?ým ma?ás./ 'I slept at my father's back that time long ago.'

/nèkbéḱym béj, ník ?ejáj ky?ým ma?ám./ 'Thus did my father speak to me that one time long ago.'

741.2 The Periphrastic Subjunctive. {ják} 'resemble' and {ná} 'result in' are the only morphemes which occur with the subjunctive endings (733). The resulting forms are used as auxiliaries, with an uninflected preceding main verb, for example,

with {ják} :

/?yḱóḱoj jákḱen./ 'They may be going off in all directions.'

/mym májdym ?yjé jákḱen./ 'That man's possibly coming.'

with {ná} :

/nìḱí héskym manímmyni, japájto náćes mín./ 'If you are my friend, I might talk to you.'

/?eḱáwće náćen./ 'They would probably look (on me) as wonderful.'

with {ják} in the first clause and {ná} in the second clause:

/nìḱí héskym ma jákḱeno, će?óḱit náćes mín./ 'If you were my friend, then I would visit you.'

/mym májdym nìḱí héskym ma jákḱen, mým ?as ník japájto náćen./ 'If that man were my friend, then he would talk to me.'

741.3 Periphrasis with {sy?ýj}. {sy?ýj} functions as an uninflected tactic element with certain subjunctive and interrogative constructions.

(1) {sy?ýj} with the subjunctive is always preceded by /?áj/; the sequence /?áj sy?ýj/ occurs in second position, intensifying the notion of speculativeness in the meaning, for example,

/húḱojnum ?áj sy?ýj mym májdym nìḱí héskym ma jákḱen./ 'I suppose that man is still my friend.'

/mín ?áj sy?ýj máj jákḱen./ 'Perhaps (someone) has spoken of you.'

(2) {sy?ýj} with the interrogative, also in second position (but without /?áj/), conveys the notion of past time, for example,

/hesádom sy?ýj mym mómpìspìstom ?yjéḱade./ 'Why did that water ouzel come?'

/homónna sy?ýj ?ynómàdom májḱa./ 'Where did you say you were going?'

/mínḱi ḱíḱi sy?ýj hójwihàjeḱa./ 'Did you bring your cat?'

741.4 The Periphrastic Imperative, {?usán} {?así}. This form has connotations of mildness and respect, for example,

/huḱojnum ?yḱój ?usán ?así./ 'Perhaps you'd better go now.'

742. Expansion by Prior Attributive. This type of expansion involves two position-classes in the following sequence:

742.1 Adverbial construction with {teté}, 'big.' This is a member of the class Ad (652) and the allomorph ‖t‖ of {Nini}, adverbial suffix: (A_1):

‖teté t‖ : /tetét/ 'very, very much'

/tetét/ may be followed by the tactic form /píkno/, an element which occurs only in this construction:

/tetét píkno/ 'extremely, excessively, strictly,' etc.

742.2 Adverbial construction with {jahá}, {wasá} or ST. Second position may contain either of two other adverbial constructions which together constitute a single position class (A_2):

(1) {jahá} or {wasá}, two other members of class Ad (652), with the morph ‖t‖ as in 740.1 above:

/jahát/ 'well'

/wasát/ 'ill, badly'

(2) Any adverb derived from any (semantically) appropriate stem by means of the allomorph ‖Nini‖ of the adverbial suffix {Nini} (742.1), for example,

{bât}, 'flatness,'

‖bât Nini‖ : /báttini/ 'flatly'

{hútu}, 'craziness,'

‖hútu Nini‖ : /hútutini/ 'crazily'

{pín ti}, 'sound'

‖pín ti Nini‖ : /píntitini/ 'soundingly'

A derived set of numeral adverbs occurs with {Nini} : ‖Nini‖, with complications in the forms for 'once,' 'twice,' and 'thrice,' namely, /sýttini/ 'once.' This may be taken as based on a uniquely occurring variant shape of {sýtti}, namely, ‖sýt Nini‖ : /sýttini/. Or it may be taken as a reduction of an older *‖sýtti Nini‖ : */sýttitini/. /pénejnini/, 'twice,' is based on a uniquely occurring allomorph of {péne}, namely, ‖pénej‖ (cf. 510.1). /sápyjnini/, 'thrice,' is formed like /pénejnini/. The other basic numeral stems are formed regularly, for example,

‖ćýj Nini‖ : /ćýjnini/ 'four times'

‖má wýk Nini‖ : /máwýknini/ 'five times'

‖sáj ćók Nini‖ : /sájćòknini/ 'six times'

‖má ćók Nini‖ : /máćòknini/ 'ten times'

750. Summary of Verb Constructions

This section summarizes the preceding discussion of verbs, and defines the external distribution classes Vf, Vk, Vc, and Vd. For an explanation of the symbols used, see 660.

VT: ST[{ti}] [((ʔus))] [MLA] [{men}] [((bós))] [((ćój))] (720)
vV: [{teté} {Nini} [{píḱno}] + ({jahá} + {wasá} + ST){Nini}] VT (742)
Vf: vV ({kyʔým} + {wonò}{Im$_1$}) {ka.ˊ} II (741)
Vf: . . .[{ʔáj}{syʔýj}]. . . . vV ({ják} + {ná}) {ǩe} I (733, 741.2)
(. . . = a single member of S, O, or L; ···· = one or more members of S, O, or L)
Vf: . . . {syʔýj} . . . . vV {ǩade} V* (743.3)
*that is, Set V of the number-person suffixes (731).
Vf: vV [{má}] {k} {'æ} I (732.1, 732.2)
Vf: vV {ʔ} {ús} {'æ} I (732.3)
Vf: vV {ʔ} {'æ} II (732.4)
Vf: vV {b} ({yʔy} + {æ}) IV (734.1, 734.2)
Vf: vV {b} {á} VI (734.3)
Vf: vV {ǩade} V (735)
Vf: vV({pi} + {padá} + {wonó} + {paʔaje}[{k}{'æ} I]) (736, 737, 738)
Vk: {ka.ˊ} [{má}] {k} {'æ} I (732.1, 732.2)
Vk: {ka.ˊ} {ʔ} {ús} {'æ} I (732.3)
Vk: {ka.ˊ} {ʔ} {'æ} II (732.4)
Vk: {ka.ˊ} {b} ({yʔy} + {æ}) IV (734.1, 734.2)
Vk: {ka.ˊ} {b} {á} VI (734.3)
Vk: {ka.ˊ} {ǩade} V (735)
(for the allomorphy of {ka.ˊ} 'be,' see 711)
Vc: VT{dom}
Vf: (Vk [. . .ˊ.] Vc) + (Vc Vk)
(. . . . = one or more members of S, O, or L.)
Vd: vV (III ((myni)) + ((wet)) + {dom} + {ják} {ǩe} I) (739, 741.2)

800. MINOR FORM-CLASSES

These are all coterminous with tactic units and, as such, are more or less rigid and limited in syntactic distribution. Their privileges of occurrence are described, class by class, in the present section and are excluded from the distributional statements in section 900. This makes it

possible, in that section, to provide a simpler and clearer description of the arrangements of the major tactic units in clauses, phrases, and sentences.

810. Connectives (C)

These usually occur initially in the clause or phrase and all have as first member of a compound structure the morpheme {ʔa.ˊ}. /ʔadóm/, the commonest member of the class, is also found at the end of a phrase with the meaning 'because,' for example, /...mým ʔas níḱ ćeʔám ʔadóm./ '...because he saw me.' The other connectives never occur phrase-finally. Some of the second syllables are unidentifiable, but several of them are identical in form to certain inflectional suffixes found in the verb. The members of this class are:

/ʔaćék/ 'about this time'; unique second member
/ʔaćét/ 'however'; cf. {ćet} (739.1)
/ʔadóm/ 'then'; cf. {dom} (739.3)
/ʔadýk/ 'furthermore'; cf. {dýḱ} 'just, only'
/ʔakýmèn/ 'at that time'; cf. {mén} 'time, season'
/ʔamá/ 'since then'; unidentified second member
/ʔamám/ 'thereupon'; unique second member
/amét/ 'therefore'; unique second member
/ʔamýni/ 'so then'; cf. {myni} (739.1)
/ʔawét/ 'although'; cf. {wet} (739.2)
/ʔawéten/ 'having so done'; cf. {wetèn} (739.2)

820. Hesitation Forms (HF)

There are two of these:

{béj} occurs in slightly hesitant speech immediately following any tactic element and always in turn followed by /,/. Related inflected forms have a meaning 'now' or 'so then, so now,' etc., but {béj} as a pause form cannot be said to mean more than the English '...uh...,' for example,

/ʔamánan kaḱás béj, myjím béj, Oroville-di nìḱí sykúlmàpedi ʔydíknowonòm./ 'From thence I--uh--to that--uh--school of mine in Oroville--I arrived there.'

{ʔísḱa} 'now, let me see' is much more hesitant and deliberate than {béj}. Though it is often used as a monomorphemic tactic element, it

may have the inflectional ending of the word for which the speaker is groping. This latter arrangement gives the impression of being better style, for example,

/ʔadóm béj, kájna wisétsètdom béj, nìkí wasása, ʔísḱa, hésbotowetèn, ʔísḱadi, nìkí hadójkydi wowómitbòs kyʔým maʔás./ 'Then--uh--being somewhat frightened--uh--having--let me see--gathered my things together, I put them all into my--what do you call it--suitcase.' (Note here that the first /ʔísḱa/ is uninflected, but that the second one—/ʔísḱadi/—"agrees" with /hadójkydi/ 'suitcase.')

830. The Emphasis Marker (EM)

Any element except a verb may be emphasized by being placed in the first tactic position, with {ʔas}, 'the immediately preceding tactic element is emphatic,' in the second tactic position, for example,

/mym májdy ʔas lolóo méjḱas./ 'That's the man I gave a basket to.'

/mym májdy lolóo méjḱas./ 'I gave that man a basket.'

Pronominal subjects are usually followed by {ʔas}, presumably since the use of an overt independent pronoun is, in itself, a device for emphasis, for example,

/ní ʔas sólḱas./ 'I'm the one who sang.'

/sólḱas./ 'I sang.'

The temporal absolutes (841) are also emphasized with {ʔas}, for example,

/bének ʔas ʔyjéwèjeḱan./ 'It was tomorrow that he said he's coming.'

/bének ʔyjéwèjeḱan./ 'He said he's coming tomorrow.'

In clause-final position, {ʔas} is exclamatory in function, for example,

/tetét píkno butújtapopem kakýḱan ʔas./ 'How hairy it seemed to me!'

The emphatic marker sometimes occurs between each of a sequence of dependent clauses preceding a final finite clause. In the example below (a formal plea addressed to rattlesnakes), each dependent clause is lent emphasis by the following {ʔas}:

/tetét jahát húwèjedom ʔas, ćájna lýkḱojdom ʔawéten ʔas, jahát bís ʔusán ʔasí./ 'Thinking in a good way, then crawling away, you are to stay well (away from us)!'

When an adverbial absolute (842) is in the same clause, {ʔas} occurs in the third tactic position, for example,

/mí maʔát ʔas nìḱí héskym maḱá./ 'Is it indeed you who are my friend?'

840. Absolutes

Various stems, single morphemes, etc., are used for special absolute ideas within the context of the phrase.

841. Temporal absolutes (TA). These consist of such words as the following: /bének/ 'tomorrow,' /kulú/ 'yesterday,' /béjdyk/ 'now,' and /sýttini/ 'once, at one time.' They occur typically in the first tactic position of a clause, but are also permitted in the last tactic position. Examples in the first tactic position:

/bének ní sólmàḱas wédadi./ 'Tomorrow I'll sing at the weda.'

/húḱojnum kaḱán mym kylóknonòm sóldom./ 'Still those women are singing.'

Examples in the last tactic position:

/tetét húmusipḱas béjʔim ʔèkí./ 'I've sighed a lot today.'

/jamánnan jewéjʔam kulú./ 'He came back from the mountains yesterday.'

842. Adverbial absolutes (AA). These consist of such words as /haʔáj/ 'nevertheless, on the other hand, really,' /tibí/ 'scarcely,' /béjby/ 'also,' /maʔát/ 'indeed, perhaps,' etc. Examples in the second tactic position are:

/kàpí maʔát bénťabys ʔadóm./ 'Because perhaps I might step on a rattlesnake.'

/ʔamám tibí díbòsmyni, mym kylékywòno./ 'Then, when she was scarcely grown, he married her.'

Examples outside the second position are rare:

/ʔaċét maċójʔam kaʔápe maʔát húwèjemendom./ 'But he says that indeed he was not thinking in that way.'

850. Interjections (I)

These are of two types: (1) those which occur with other morphemes in the same phrase, and (2) those which occur alone as complete utterances. Members of the first group are:

/hés/ 'what!, how!, such!,' for example,

/hés haʔáj mym majdym wiléklèknini jewéjkyḱan./ 'How quickly that man seemed to get back!'

/wéh/ occurs with /hés/ to express the idea of great astonishment, for example,

/hés wéh bútu./ 'Such (an incredible lot of) hair!'

/hap̓á/ [finally] ~ (/hap̓á/ $\overset{f}{\sim}$ /háp/ [nonfinally]) 'of course, certainly,' for example,

/mí hap̓a/ 'Of course, you (are the one)!'

/háp ník mykánim kaʔábyʔỳ, tetét píkno weléḱojmennàc̓es./ 'If that happened again I'd certainly not run away!'

/wísse/ occurs only with /hés/ to express the idea of unacceptable exaggeration, for example,

/hés wísse./ 'How exaggerated!'

Members of the second group are:

/hahá./ 'Oh boy!' (exclamation of pleasure)

/heʔé./ 'Yes.'

/héw./ 'Good! O. K.'

/hó./ 'Yes.' (used as a response when addressed)

/sí./ 'Oh!'

/sú./ 'Well!' (expressing mild surprise)

/wéh./ 'Fantastic!'

/wíjje./ 'No!'

/wòkkadássikkà./ 'Goddamit!' This word is used to express extreme displeasure and wrath. It is said to be borrowed from Atsugewi. It is a single morpheme and, as such, is clearly outside the Maidu canon.

860. Question Words (QW)

These always occur in first tactic position, and are based on three morphemes:

{hês} :

/hèsí/ 'what'

{hesá} :

/hesádom/ 'why'

/hesápedi/ 'whereabouts'

/hesása/ 'how'

/hesátidom/ 'in what manner, by what means'

{homó} :

/homó/ 'which, whither'

/homómo/ 'which'

/homón/ 'where'

/homóni/ 'who'
/homóndi/ 'where'
/homónik/ 'whose'
/homónna/ 'whither'
/homónnan/ 'whence'

900. THE TACTICS OF THE SENTENCE

As has been previously explained, there are seven major external distribution classes (660, 750). They are:

S (Subject Substantives)
O (Object Substantives)
Po (Possessive Substantives)
L (Locative Substantives)
Vf (Finite Verbs)
Vd (Dependent Verbs)
Vk (Copula)

These classes are coterminous with the seven major tactic units occurring in phrases, clauses, and sentences. Certain cover statements may be made with the class V : Vf + Vd; the two classes of verbs are, nevertheless, major tactic units. In addition, there are seven minor external distribution classes (800). They are:

C (Connectives)
HF (Hesitation Forms)
EM (Emphasis Marker)
TA (Temporal Absolutes)
AA (Adverbial Absolutes)
I (Interjections)
QW (Question Words)

These are coterminous with the seven minor tactic classes; their positions in phrases, clauses and sentences have, for the most part, already been described.

910. Tactic Expansions of S, O, and L

Of the major tactic units, only two-way combinations with Po as first member and S, O, or L as second member occur as expansions of S, O, or L. Thus, Po is an ultimate tactic element in the expression only when it occurs outside such expansions.

The specific expansions of S, O, and L are:

S' : Po S, for example,

/nìḱí hybóm/ 'my house'

/mym wépam wájsik kylém/ 'Old Man Coyote's wife'

O' : Po O, for example,

/ʔuním nenópem májdyḱi helám sòlí/ 'this old man's gambling song'

/nìkʔópak jálulù/ 'my grandfather's elderberry flute'

L' : Po L, for example,

/mym betéjʔim wónom májdyk tetém ḱumúdi/ 'in the big dance-house of the people of ancient times'

/wóleḱi sidína/ 'to the city of the white men'

These expansions are prime, that is, they may not be further expanded with Po.

920. Tactic Expansions of V

Of the major tactic units, only combinations of O and V occur as expansions of V. Thus, O is not an ultimate tactic element in the clause, phrase, or sentence. The arrangements of O and V are unrestricted with one exception: when an expression contains two O, the sequence V O O does not occur. In all types with two O, it must be taken that there are three immediate constituents in the construction.

The specific expansions of V are:

V' : O V, for example,

/wépa pínḱa./ 'Did you hear the coyote?'

/lókbo jókmyni,/ 'When the root was pounded,' (lit., "When someone had pounded the root,")

V' : V O, for example,

/lýtʔusàn tetét jahám maháti./ 'They baked very good bread.'

/ćenóćet myḱí hybó,/ 'While looking at his house,'

V' : O V O, for example,

/ćùṕí hýḱojtip nìḱí./ 'Go pick me some willows.'

/hómma méjwetèn mym májdy,/ 'When she had given that man the soup,'

V' : O O V, for example,

/ćùṕí ník hýḱojtip./ 'Go pick me some willows.'

/hómma mym májdy méjwetèn,/ 'When she had given that man the soup,'

These expansions of V are prime, that is, they may not be further expanded.

930. The Clause (CL)

A clause is any sequence of tactic units which:

(a) is preceded by /,/ or silence;

(b) is terminated by /,/ or /./, with /,/ or /./ as the ultimate constituent of the clause;

(c) contains one V;

(d) contains two, one, or no S;

(e) contains one or no Po, with the restriction that a CL with one Po has no more than one S;

(f) contains any number of L or no L, although four L for a single CL is maximal in the corpus.

A CL which contains a Vf is a CLf; one which contains a Vd is a CLd. The arrangements within these two types of CL are identical, but for Vf: (Vk [. . . .] Vc) + (Vc Vk) (750).

Except for the fact that a Po is always just before the final /./ or /,/, the various constituents are unrestricted with regard to sequence. Certain arrangements are statistically preponderant, however:

S is usually in first position;

L usually comes before V;

V is usually CL-final except when there is a Po (as mentioned above) or when there are two S, in which case one S usually follows the V.

S, V, and L are interrelated in the following ways, taken as constituents in the CL:

S and V are always in immediate constituency with each other.

Two S in one CL always have a three-way constituency with the Vk, for example,

CL:	S	Vk	S	.
/mym	májdym	kaǩán	nìǩí	héskym./
	That man	is	my	friend.

Any L is in immediate constituency with the rest of the CL in which it appears. If there is more than one L in a CL, there is no criterion for determining layers of constituency. In such cases, all L must be taken as a group of constituents forming, with the rest of the CL, a single construction. This follows as a corollary of the fact that tactic units (except Po) may occur in any order. The preferred order for several L with V is:

CL: L	L	L	V
/jamánna	níktynìǩan	lájmèndi	ʔyǩójʔusàs./
to the mountains	along with my younger brother	in the summer	I used to go.

But the following arrangements are all acceptable:

CL:	L	V	L	L .
	/jamánna	ʔyḱójʔusàs	níktynìḱan	lájmèndi./
CL:	L	L	V	L .
	/lájmèndi	nìktynìḱan	ʔyḱójʔusàs	jamánna./
CL:	V	L	L	L .
	/ʔyḱójʔusàs	lájmèndi	jamánna	níktynìḱan./

etc.

This construction may be summarized with three L as a practical limit: CL: [L] [L] [L] V [L] [L] [L].

S or L or both may occur between Vk and Vc. In such a case, L is still in constituency with (S Vk Vc). Similarly, S or L may occur inserted within any expansion of V, in which case the S or L come immediately before the head, or final, constituent of the expansion. Further, if both S and L occur in any of the above-inserted positions, S always precedes L. Examples of these various situations are:

CL:	Vk	S	Vc	.
	/kaḱan	mym májdym	welénodom./	
	is	that man	running	. , that is, 'That man's running.'

S within an expanded V (V O) (920):

CL:	V	(S)	O	
	/hís?usàn	ʔaním kylém	loló./	
	used to weave	that woman	bas-kets.	, that is, 'That woman used to weave baskets.'

S within the expanded VT of a V (750):

CL:	A	(S)	VT {ʔ} {æ} {n}	
	/wiléknini	mym májdym	weléno?am./	
	fast	that man	ran	. , that is, 'That man ran fast.'

CL:	Vk	L	Vc	, for example,
	/kaḱás	ċámmini	pedóm./	
	I am	with a knife	eating.	, that is, 'I'm eating with a knife.'

L within an expanded V (OV) (920):

CL:	O	L	V	
	/mòmí	lolónan	mopí./	
	water	from the container	drink.	, that is, 'Drink water from the container!'

S and L within the expanded VT of a V (750):

CL: A	(S)	(L)	VT {pa?áje}
/tetét	mym jántam	wetémdi	sólpa?àje./
a lot	that badger	at the dance	sang, long ago. , that is, 'That badger sang a lot at the dance.'

The basic formulas for clauses are listed below with examples. Types with inserted S and L are omitted; they have been described above. Also, two or three more L may be added to any one of the constructions listed, and at any point. All of the formulas are in immediate constituency with /./ or /,/ (cover symbol ;) to form a completed clause construction. In general, the preferred sequences are those which have S in first position and V in the last position before /./ or /,/.

CL: V;

/tetét píkno ćát?am./ 'He squalled an awful lot.'

CL: S V;

/wépam ?ynópa?àjǩan./
coyote went along, long ago . , that is, 'Coyote was long ago going along.'

CL: V S;

/jahát ćetíǩan mym kylém./
well cause to look that woman. , that is, 'That woman is beautiful.'

CL: L V;

/ćámmini sỳmí pedóm,/
with a knife meat eating, , that is, 'Eating meat with a knife,'

CL: V L;

/bís?usàn ?uním ǩódojdi./
used to live (3P) this district- in . , that is, 'He lived in this district.'

CL: Vk PO ;

/kaǩan wóleǩi./
it is white man's. , that is, 'It's the white man's.'

CL:	S	V	S ;
/mym	kylém	kaǩán	nìkpóm./
that	woman	is	my daughter., that is, 'That woman is my daughter.'

CL: S V L ;
/nìk?ópam ?yḱój?am jamánna./
my grand- went to the
father mountains., that is, 'My grandfather went to the mountains.'

CL: S L V ;
/kylóknonòm hybónan jewéjwetèn,/
women from the when had
house returned, , that is, 'When the women had returned from the house,'

CL: S Vk Po ;
/?uním sým kaḱán núsnùsiḱi./
this dog is Nusnusi's. , that is, 'This dog is Nusnusi's.'

CL: V S L ;
/bís?usàn nìkbéḱym ?uním ḱódojdi./
lived my father this district-in., that is, 'My father lived in this district.'

CL: V L S ;
/tawáldoj?usàn jókmèndi nìkbéḱym./
used to start spring- my father., that is, 'My father used to
working time-in start working in the springtime.'

CL: L V S ;
/wetémpena ?yjépa?àje wélḱetîm kylókbem./
the dance- arrived frog old
to long ago woman ., that is, 'Frog Old Woman arrived at the dance.'

CL: L S V ;
/nìktyníḱan nìk?ópam níḱ mákpapàjti?am./
my younger my grand- me used to teach. , that is, 'My grand-
brother- father father used to teach
along with my younger brother and me.'

CL: L Vk Po ;
/télolik hybódi maćój?am mymýk./
Cottontail's was, they his . , that is, 'His was at Cotton-
house-at say tail's house, they say.'

CL:	L	S	Vk	S ;	
/hójjam	ḱódodi	nìk?ópam	mapá?aje	jepónim./	
former times-in		my father	was, long ago	big man. ,	that is, 'Once my father was a big man.'

CL:	S	Vk	S	L ;	
/sàwím	kaḱán	jotítdojpem	jókmèndi./		
foliage	is	flowering and leafing out	spring-in.,		that is, 'In spring, the foliage flowers and leafs out.'

940. The Phrase (PH)

Apart from clauses, the sentence may contain any of three other construction-types, collectively called phrases.

941. The Connective Phrase (CPH). This is any C which is followed by /,/. Thus, a connective phrase is always bound, and in a prior position with respect to some other element of the sentence, for example,

/?adóm, wépam ?yḱójpa?àjḱan./ 'Then Coyote went away.'

942. The Interjectory Phrase (IPH). This is an I followed by /./ and preceded by silence. Thus, an interjectory phrase is always free and coterminous with a minor sentence-type (951), for example,

/he?é./ 'Yes.'

943. The General Phrase (GPH). This is any TA, AA, S, O, or L which is followed by /,/ or /./ and preceded by silence or /,/. Thus a general phrase may be free and coterminous with a minor sentence-type (951), for example,

/kulɑ́./ 'Yesterday.'

A general phrase may also be a bound element in a larger construction, for example,

/mym májdym, mym wólem májdym kaḱán nìḱí héskym./ 'That man, that white man is my friend.'

944. The Noun Phrase (NPH). This is one of two specific nominal constructions, both of which function semantically as Vd (750).

944.1 Noun Phrases with {webís}. A phrase containing a nominalized compound stem with the disyllabic auxiliary verb {webís} 'finish . . .' as second member. Such forms are always in the subject case and have the meaning 'after,' for example,

/wépam ?yḱójwebìsim, sèwím sɏhehéjḱoj?yḱòjwebìsim, kylóknonò ćećój?am./ 'After Coyote had gone, after he had travelled alongside

a river, he saw some women,' lit., 'Coyote go-finish-ness, river-travel-alongside-finish-ness, he saw women.'

944.2 Noun Phrases with S and {kân}. A phrase containing an S, expanded from {kân} 'conclusion,' as follows:

Q* $\{Im_2\}$ {kân} $\{Im_1\}$ (653, 654, 661)

*(Q must be a VT (750))

This nominal phrase is always in a position prior to a following Vf, for example,

/talópsipim kànîm, welénoc̀òj?am./ 'Having jumped out, he ran away,' lit., 'Jumpout conclusion, he ran away.'

950. The Sentence (SEN)

A sentence must have /./ in final position as one of its two immediate constituents. The other constituent may be any one of a number of constructions as described below.

951. The Minor Sentence. This is characterized by the absence of a Vf. Minor sentences always occur with a larger semantic context and are usually responses to some preceding speech. The types are:

SEN: IPH.

/héw./ 'Sure.'

/wòkkadássikkà./ 'Goddamit!'

SEN: GPH.

/kulû./ 'Yesterday.'

/hybóbedi./ 'In the little house.'

SEN: CLd.

/?ynójedom./ 'Wandering around.'

/tetét pîkno myk̀î kylé wáswèjedom./ 'Violently cursing out his wife.'

952. The Major Sentence. This is characterized by the presence of one and only one Vf. (Sentences with more than one Vf do not occur.) A major sentence with no CLd is a simple sentence. A major sentence with one or more CLd is a complex sentence.

The types of simple sentences are:

SEN: CLf.

/pîn̂kenùk̂as./ 'I'm listening.'

/mym wólem májdym ?as ?ínjanàni wéjec̀ỳjk̂an./ 'That white man can't speak Indian.'

SEN: CPH CLf.

/?amýni, bolópsippa?àje./ 'Then he jumped up and ran out, long ago.'

/ʔawétenk̀an, mypétim kylék̀an mym sèwí pósitoc̀òjʔam./ 'And then he and his mother-in-law waded across the river.'

SEN: GPH CLf .

/béjʔim ʔèkí, hybóna ʔyk̀ójmaʔèmk̀es./ 'Today, we're going home.'

/hójjam k̀ódodi, jamándi bísʔusàn./ 'Once upon a time they lived in the mountains.'

/tibím kylém p̀ýbem, ní ʔas nìkʔópa ʔyhéjʔusàs./ '(As a) little girl, I used to go with my grandfather.'

Complex major sentences are made up of one CLf and any number of CLd, about four being the limit in attested examples. Any one of the CLd may precede or follow the CLf; the actual order in which the CL occur is free, although the CLf most commonly occurs finally, for example,

SEN: CLd CLd CLd CLf .

/sóldom, wetémdom, wédam k̀ódojna ʔyk̀ójwetèn, júkbodojʔùsan./ 'Singing, dancing, when they got to the place of the wéda, they used to start performing the bear dance.'

This sentence may also be arranged in the following ways, among many other possibilities:

/sóldom, wetémdom, júkbodojʔùsan, wédam k̀ódojna ʔyk̀ójwetèn./

/wédam k̀ódojna ʔyk̀ójwetèn, sóldom, júkbodojʔùsan, wetémdom./

/wetémdom, júkbodojʔùsan, wédam k̀ódojna ʔyk̀ójwetèn, sóldom./, etc.

Proceeding from the fact that any sequence of CL may occur so long as there is one and only one CLf, the types of complex sentences may be shown as formally parallel to the types of simple sentences given above. The types are:

SEN: any sequence of CL (including CLf .)

/ʔínjanàni wéjec̀ỳjnìmmyni, kak̀án mín wéjeʔokòlemàpem./ 'If you can't speak Indian, he'll be reluctant to talk to you.'

/ʔunína ʔokítwetèn, nìsé ʔas c̀emák̀an./ 'He'll see us when he gets here.'

SEN: CPH (and) any CL sequence (with one CLF)

/ʔadóm, séwna ʔyjéʔam, húkk̀eldom./ 'Then he came to the river, whistling.'

/ʔawéten, ní wéjesc̀et, jóc̀onòp./ 'Now then, when I say (so), dive in!'

SEN: GPH (and) any CL sequence (with one CLf).

/bének, ʔotówetèn, sidína jewéjtàpyʔy, b̀ywom kaléta ʔynótidom./ 'Tomorrow, when (we) have gotten up, let's the two of us return to the city, driving the car.'

/béjʔim májdym, mym jìmí hadójkym wájsim beťékdojćòjʔam, wisétdom, butú ćećét./ '(As a) young man, when he saw the hair, that Old Man Carries-his-arm ran away, frightened.'

960. Interruptions

Various structurally incomplete parts of utterances occur as a result of interrupted speech in conversation. In addition to these, certain elements are used for special interruptive purposes:

Any connective may be used as a device for breaking in on someone elses's speech. This has an impatient, sort of 'I want to talk now' quality, for example,

A. /kaḱás mym hámsim hómma pejáhamenwonòm. mym. . ./
B. /ʔadóm. . ./
A. /mym hámsim hómma, mym hámsim. . ./
B. /ʔawéten. . .ʔadóm. . ./
A. /mym hámsim mahátim kaḱán bymýkym wasása kypém./

This may be translated as follows:

A. I never did like that acorn soup. That. . .
B. Now. . .
A. That acorn soup, that acorn. . .
B. Uh. . .now. . .
A. That acorn bread has little bits of sand in it.

The hesitation form /ʔísḱa/ or /ʔísḱam/ may be uttered alone, with the meaning, 'I just don't know what to say next.' Sometimes, also /ʔísḱa/ is used as a defense against interruption, there being a kind of tacit agreement that one who has said /ʔísḱa/ has the right to hold the floor until his next utterance is produced.

APPENDIXES

APPENDIX A

TEXT ANALYSIS

The present text (necessarily brief) is analyzed for strata, classes, and constructions. Not all the pertinent information is explicit; morphophonemes and allomorphs are given without reference to the grammar. All of the classes and constructions are tagged to the pertinent discussion section of the grammar (indicated by numbers in parentheses).

The strata are marked on the left-hand side of the page with the appropriate symbol. It should be noted that divergences between line { and line || show allomorphy, while divergences between line || and line / reflect phonological variation.

Each sentence is numbered consecutively. Classes of one member, which have no class symbol, have their constituency indicated directly without the intervention of any marker on the line which indicates class symbols.

My Grandfather

1. tibím kylém pýbem, níktynìkan nìk?ópa jamánna ?yhéj?ùsas, ?ódo tawálmàmyni. 2. níkkotòcom bej, ?ykój?ùsan.

3. jamándi ?ydíkdom, níkkotòcom ?as hybóbe hyjá?ùsan. 4. ?amýni, sá kýwetèn, pidúsdi ?ínjanàm maháti lýt?ùsan. 5. wólem láwani ja?úsan mym kylókbecom.

6. tawálbòsmyni, kulúmyni, nìk?ópam ?as jálulùni sólti?ùsan.
7. tetét ?ekáwpìnti?ùsan.

8. nìsá ?as pí mákpapàjti?ùsan nìk?ópam.

Free Translation

1. When I was a little girl, I used to go, along with my younger brother, to the mountains with my grandfather to pan for gold. 2. My two grandmothers used to go, too.

3. Upon arriving in the mountains, my grandmothers used to build a little bark hut. 4. Then, when the fire was made, they used to bake Indian bread in the ashes. 5. Those two old women used to make it out of white man's flour.

6. When the work was done and it was dark, my grandfather used to play the flute. 7. It used to sound very wonderful.

8. My grandfather taught the two of us many things.

1. little female child (subj.),

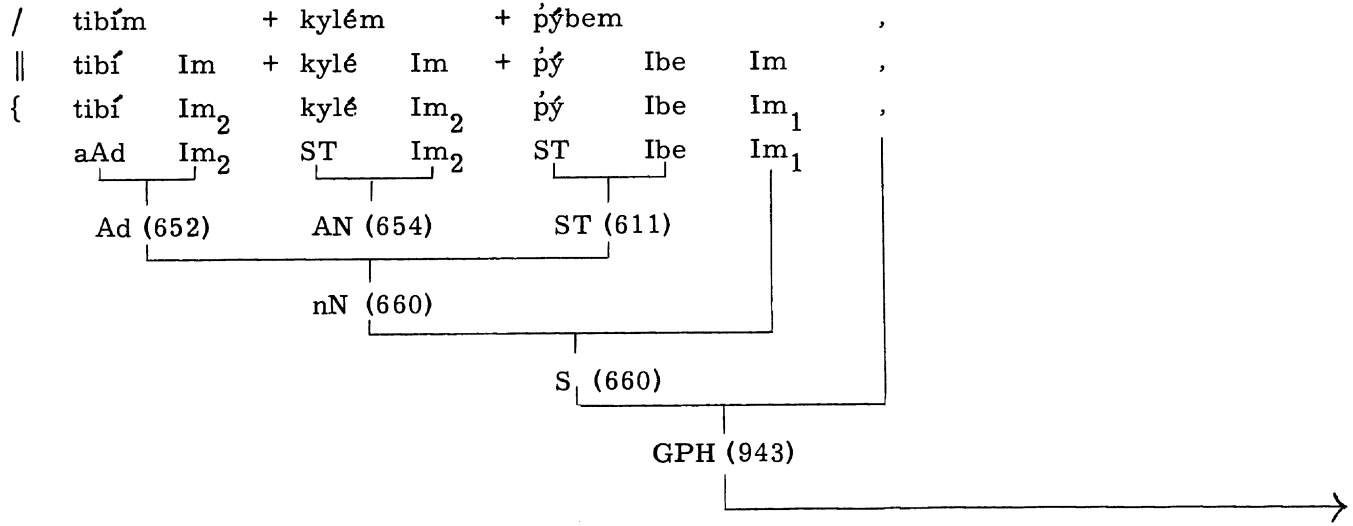

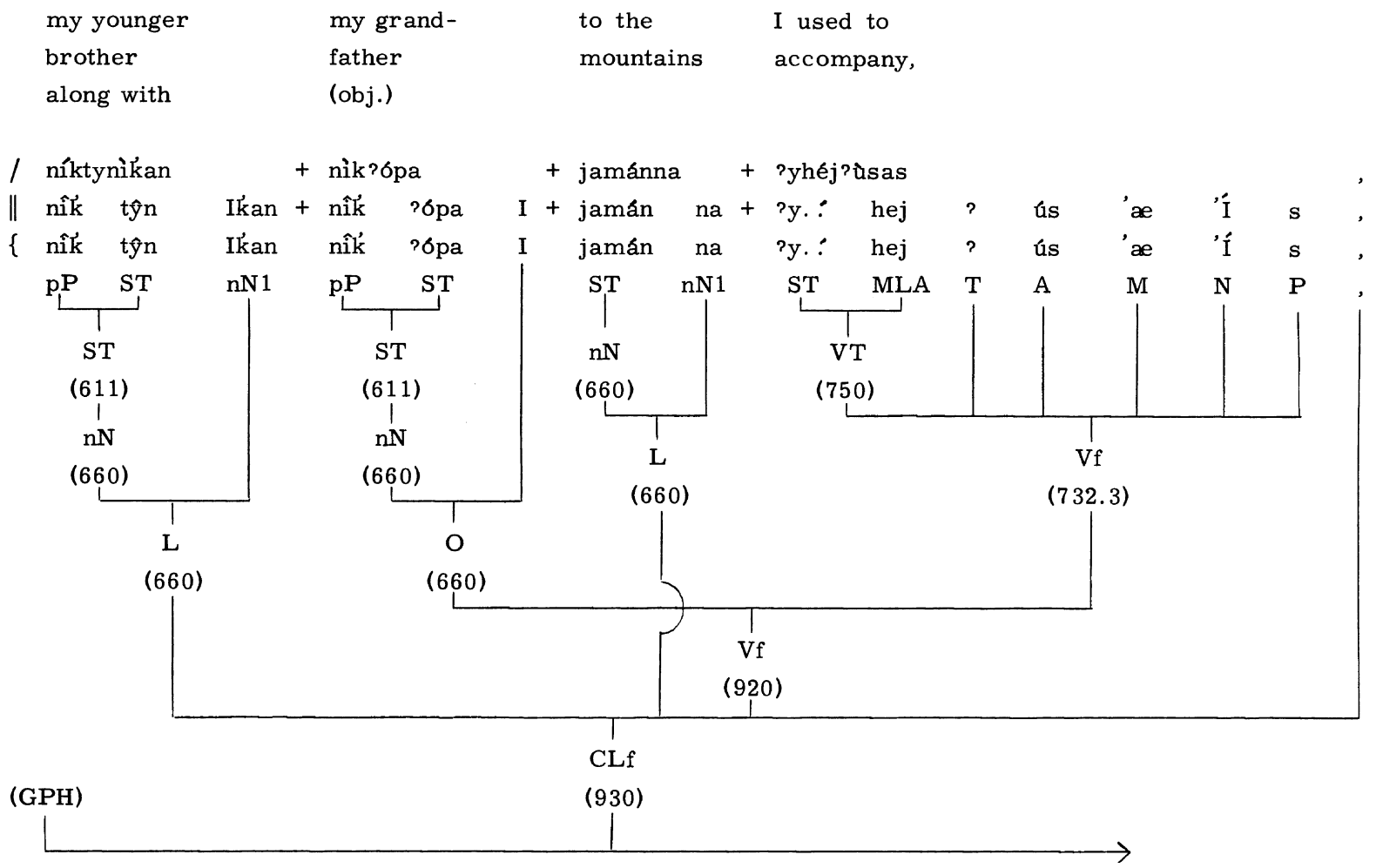
my younger brother along with
my grand-father (obj.)
to the mountains
I used to accompany,
/ níktynìǩan + nìk?ópa + jamánna + ?yhéj?ùsas ,
‖ nîǩ tŷn Iǩan + nîǩ ?ópa I + jamán na + ?y.ː hej ? ús ʼæ ʼÍ s ,
{ nîǩ tŷn Iǩan nîǩ ?ópa I jamán na ?y.ː hej ? ús ʼæ ʼÍ s ,
pP ST nN1 pP ST ST nN1 ST MLA T A M N P ,
ST (611) nN (660)
ST (611) nN (660)
nN (660)
VT (750)
L (660)
Vf (732.3)
L (660)
O (660)
Vf (920)
CLf (930)
(GPH)

gold (obj.) when he was going to work.

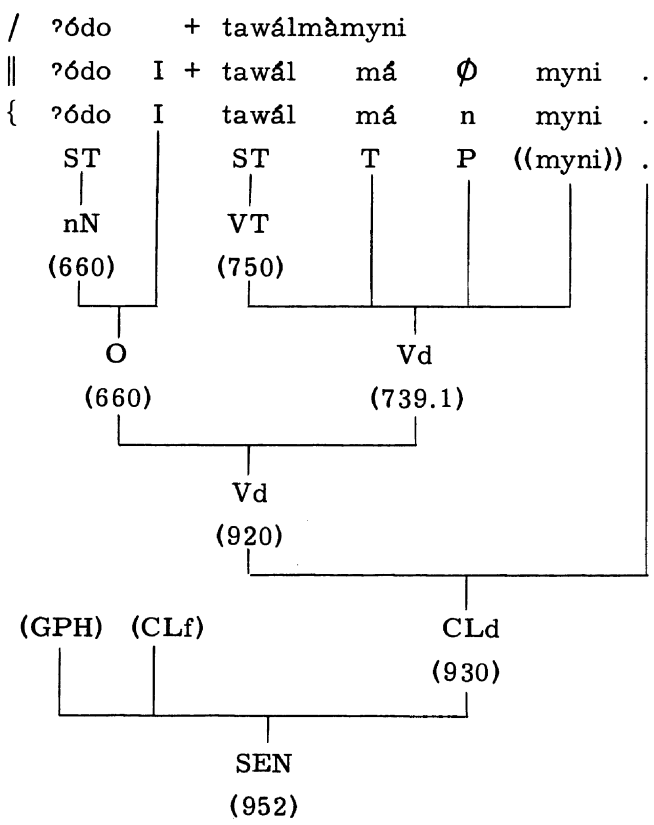

2.

my two grand- mothers (subj.) uh used to go.

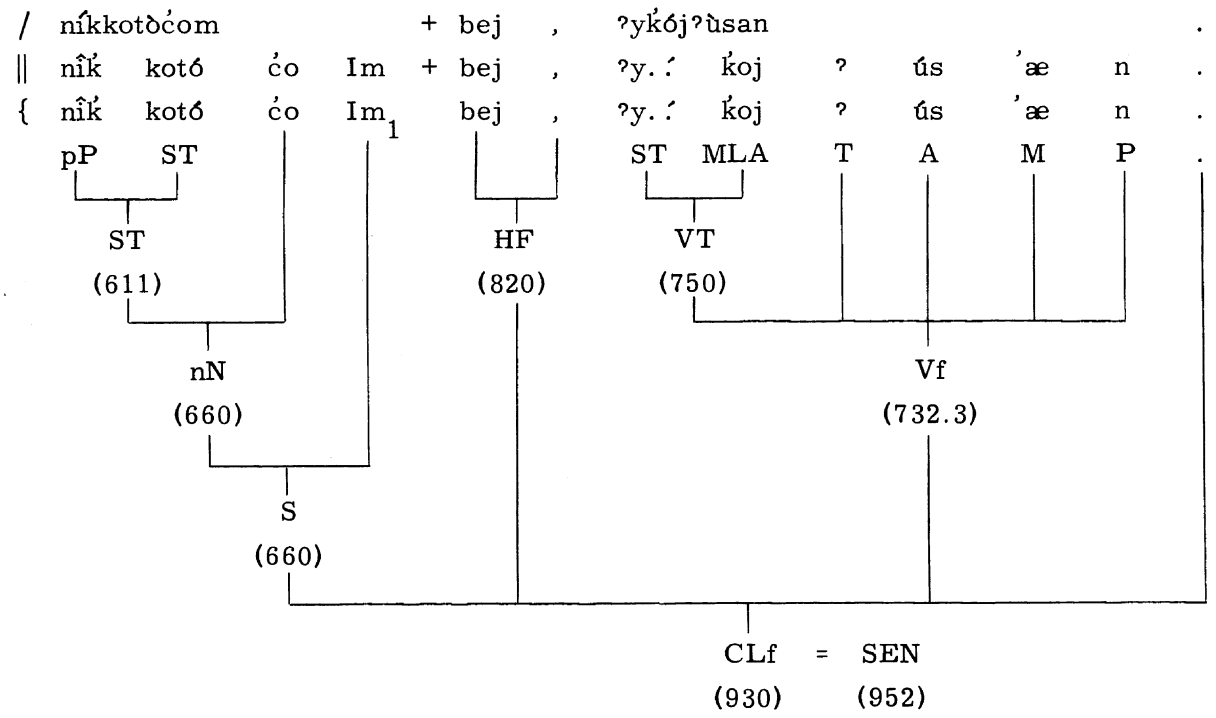

3.

in the arriving,
mountains

/ jamándi + ʔydíkdom ,
‖ jamán di + ʔy.ː dik dom ,
{ jamán di ʔy.ː dik dom ,

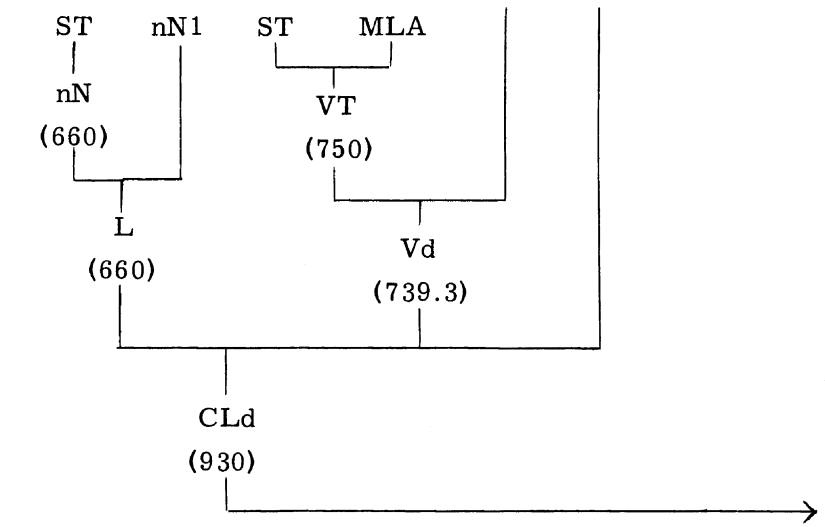

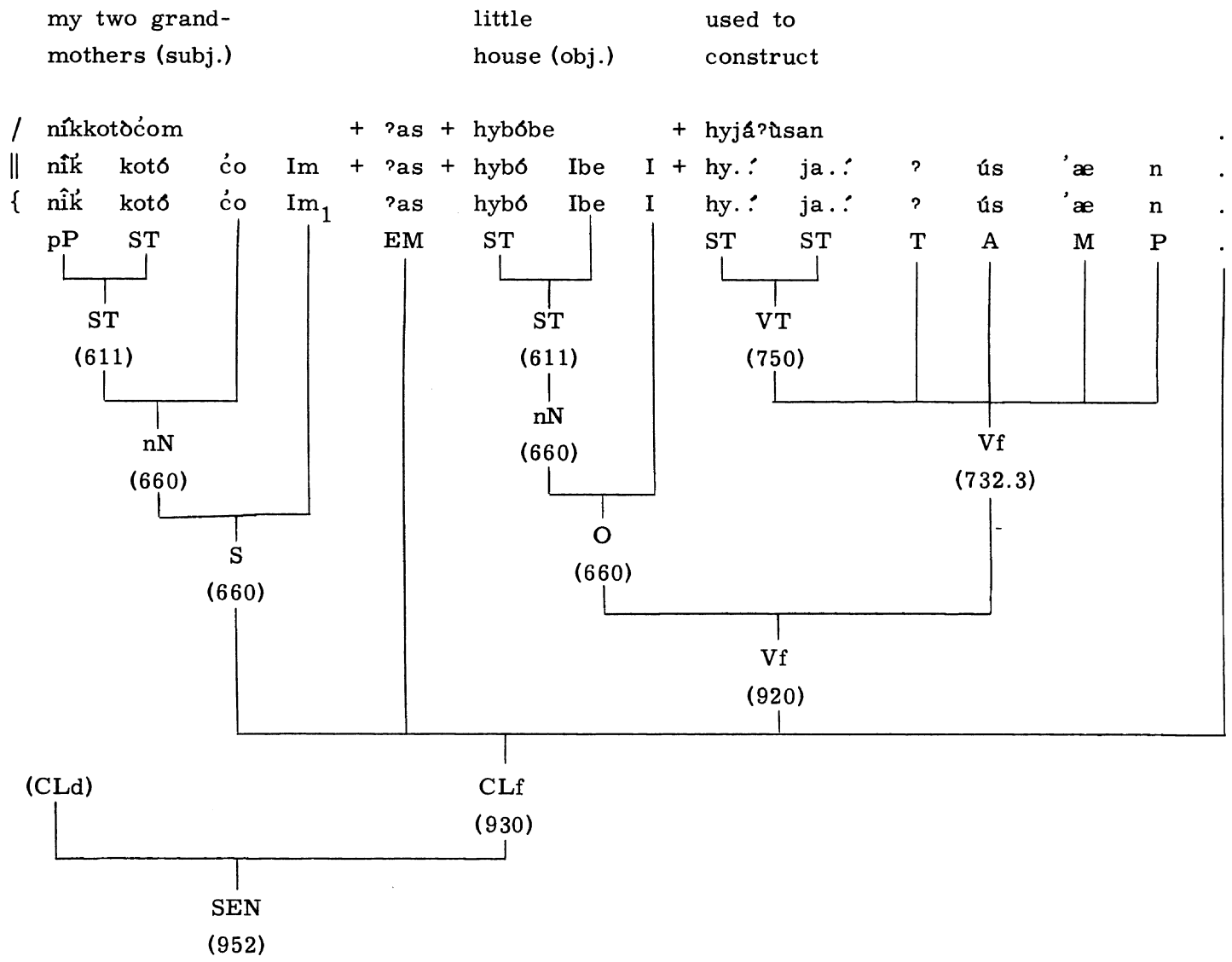
my two grand-
mothers (subj.)
little
house (obj.)
used to
construct
/ nîkkotòćom + ?as + hybóbe + hyjá?ùsan .
‖ nîk kotó ćo Im + ?as + hybó Ibe I + hy.ˊ ja.ˊ ? ús ˈæ n .
{ nîk kotó ćo Im1 ?as hybó Ibe I hy.ˊ ja.ˊ ? ús ˈæ n .
pP ST EM ST ST ST T A M P .
ST
(611)
nN
(660)
S
(660)
ST
(611)
nN
(660)
O
(660)
VT
(750)
Vf
(732.3)
Vf
(920)
(CLd)
CLf
(930)
SEN
(952)

4. thereupon, fire having just
(obj.) made,

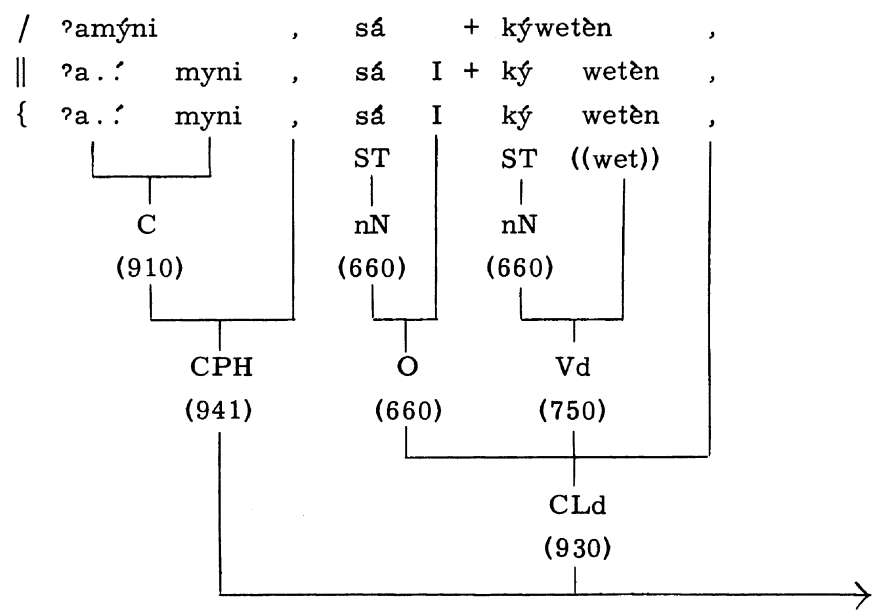

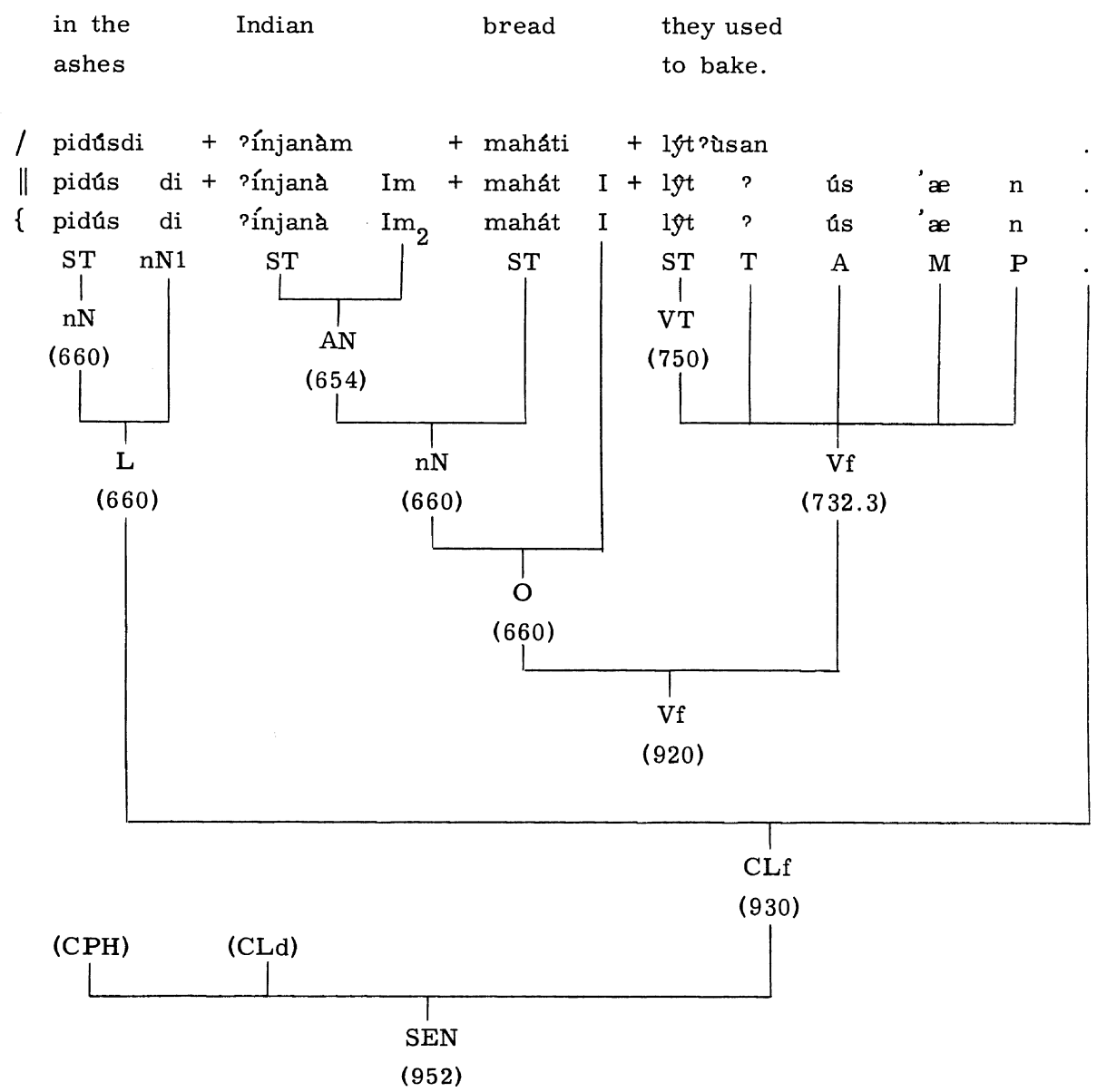
in the ashes
Indian
bread
they used to bake.
/ pidúsdi + ʔínjanàm + maháti + lýtʔùsan .
‖ pidús di + ʔínjanà Im + mahát I + lýt ʔ ús ʼæ n .
{ pidús di ʔínjanà Im2 mahát I lýt ʔ ús ʼæ n .
ST nN1 ST ST ST T A M P .
nN (660)
AN (654)
VT (750)
L (660)
nN (660)
Vf (732.3)
O (660)
Vf (920)
CLf (930)
(CPH) (CLd)
SEN (952)

5. white man's | with flour | used to make (it) | those | two old women (subj.).

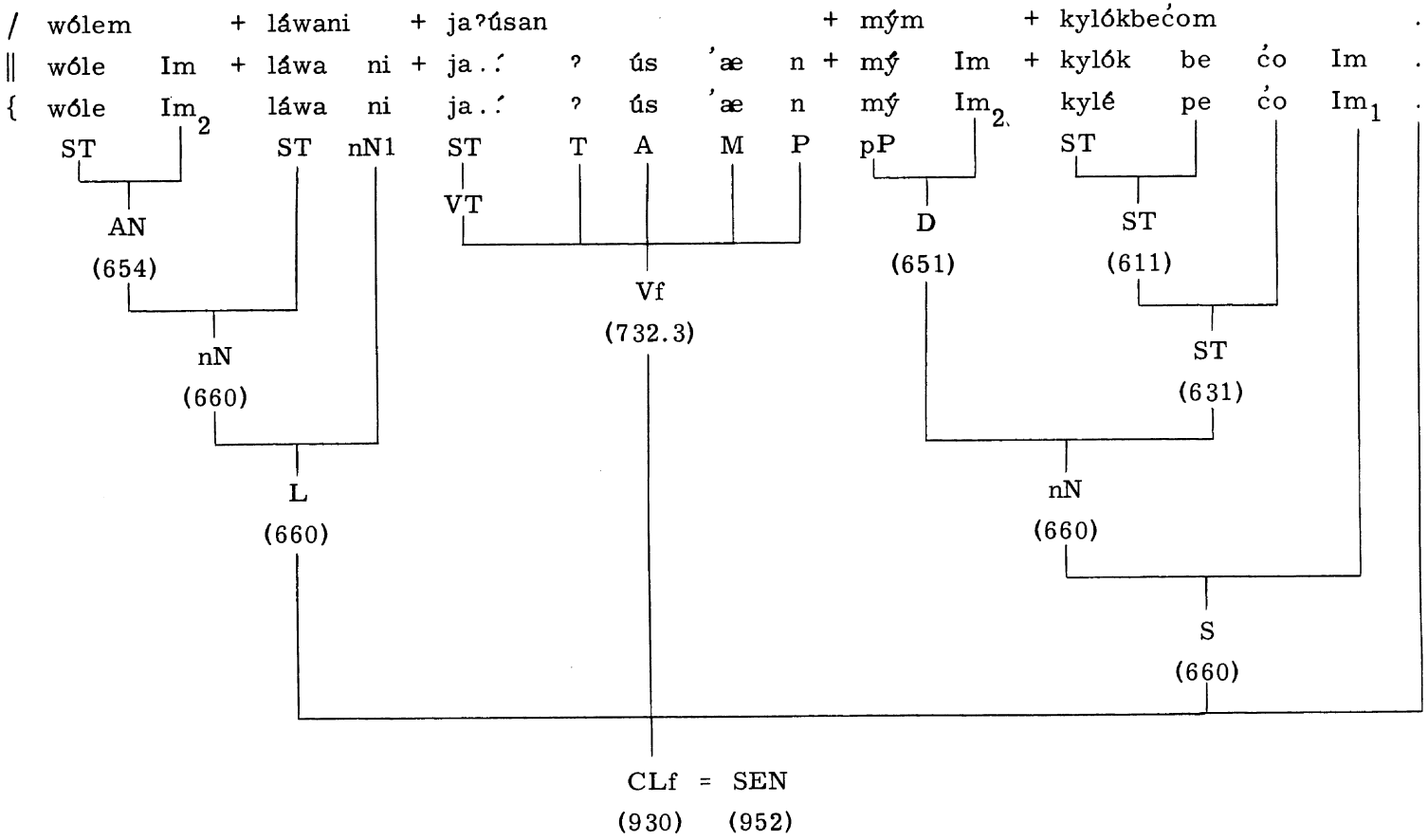

6. after the work was done, after it got dark

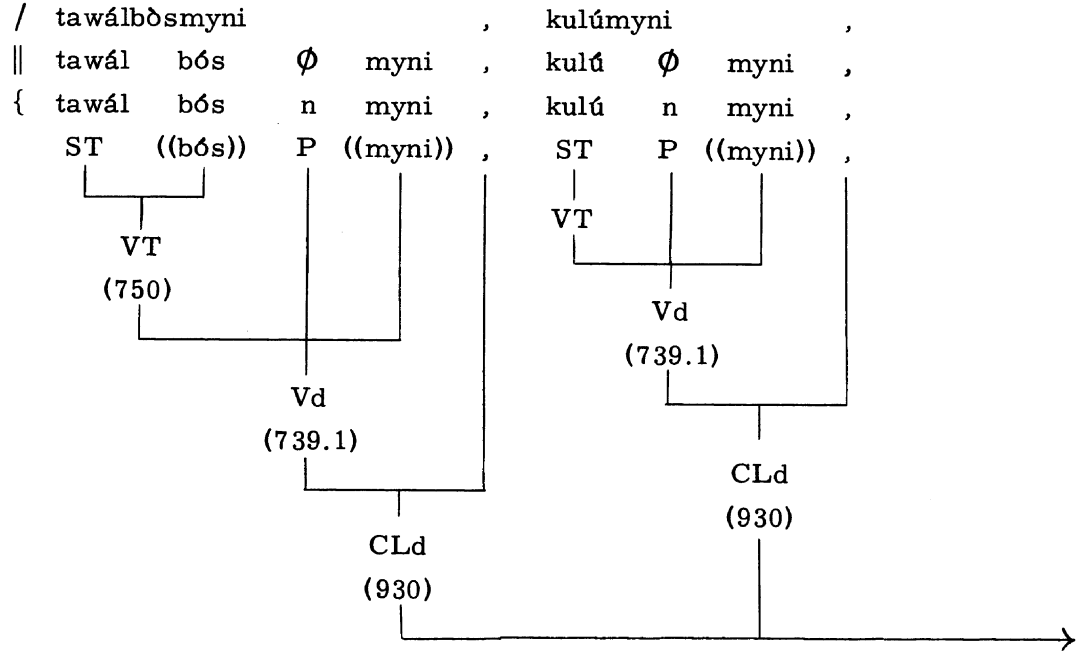

my grand-father (subj.) | with flute | used to play.

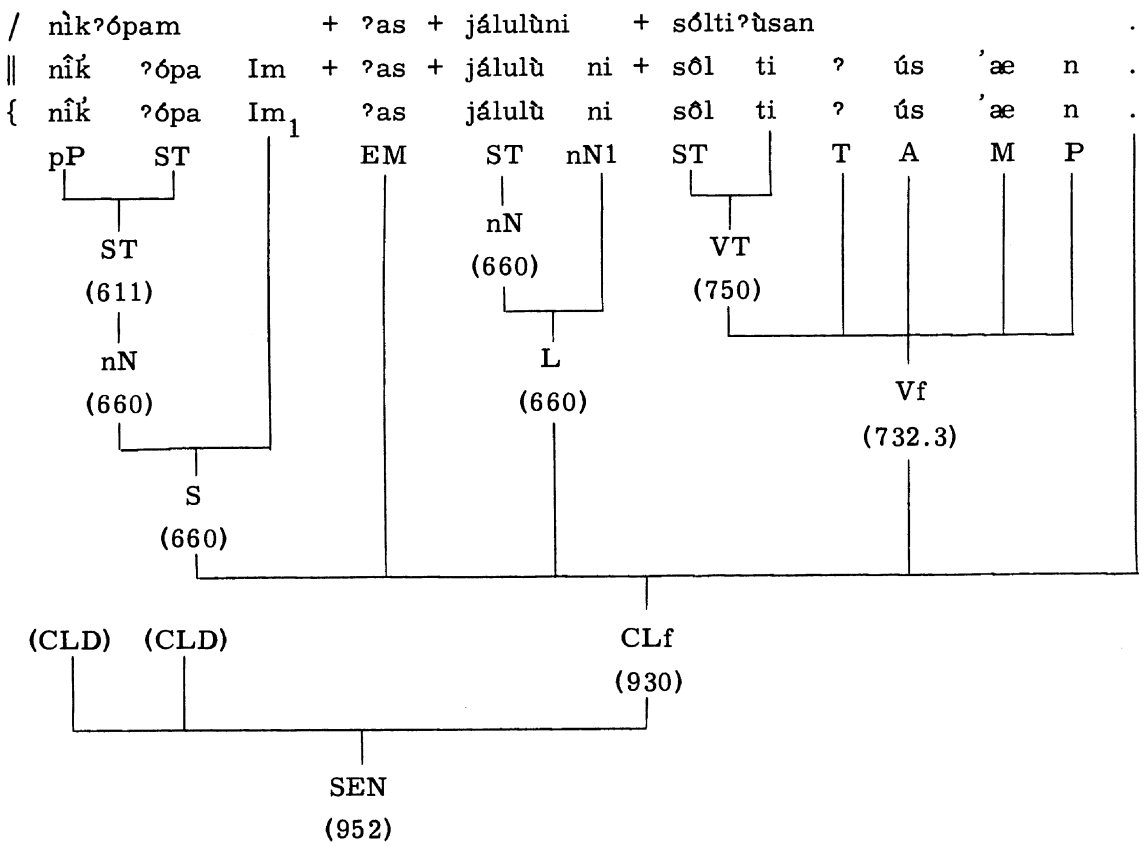

7. very it used to
sound wonderful.

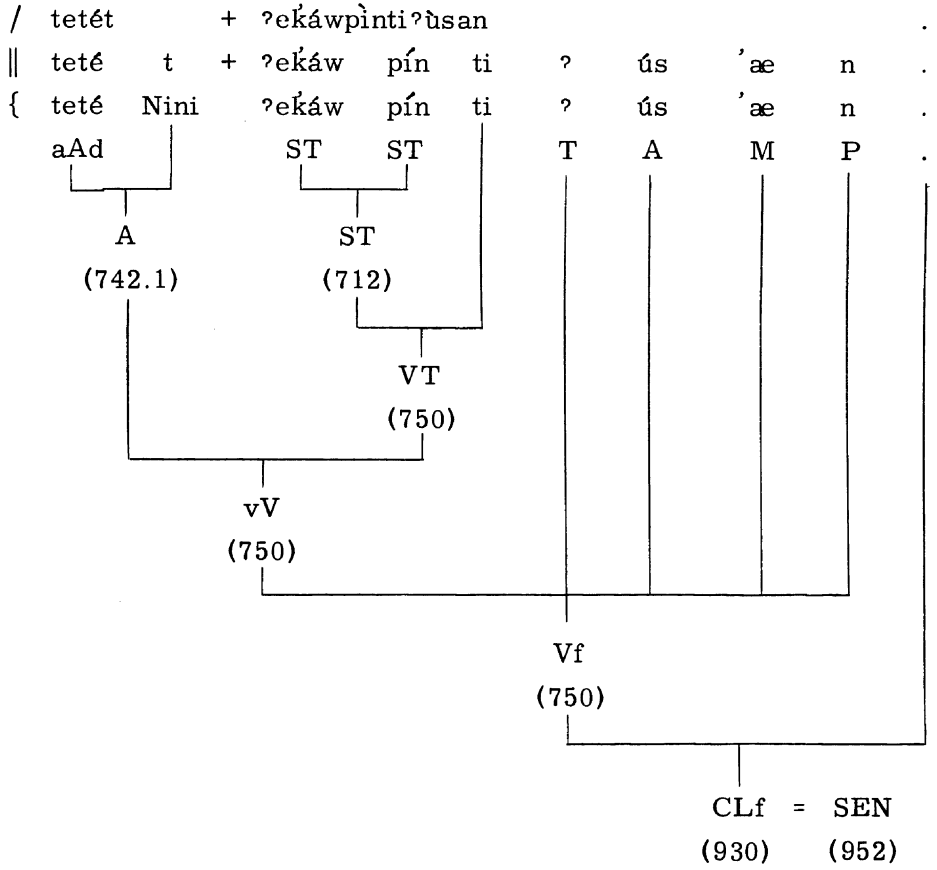

8. us — many (obj.) — used to teach — my grand-father (subj.).

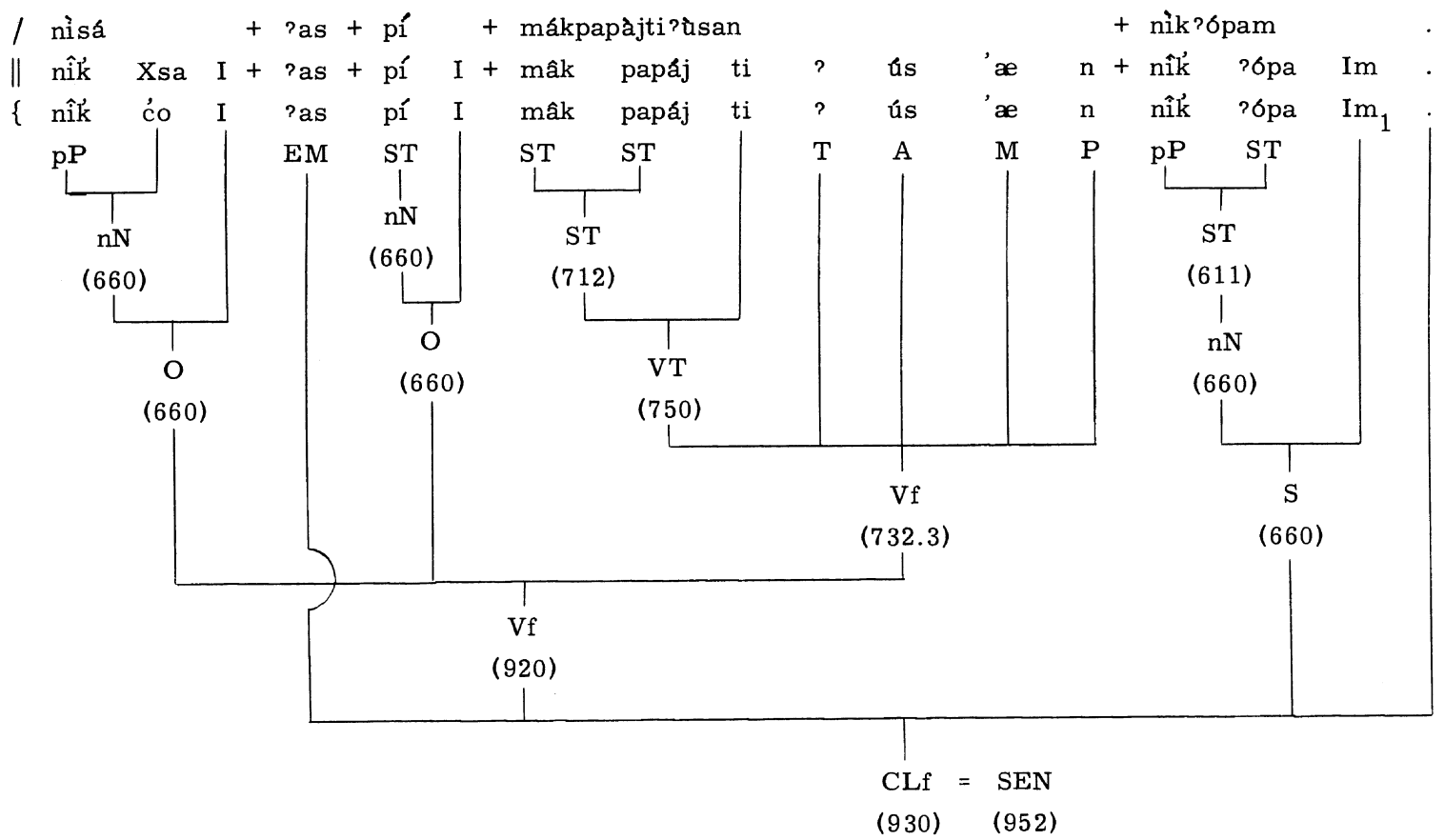

APPENDIX B

LIST OF GRAMMATICAL ELEMENTS

All of the items listed below are written either as morphs or as morphemes. Morphemes are marked with { }; morphs are unmarked. When a morpheme is cited as a primary entry, it is to be taken as having a single shape, represented by the sequence written between morphemic brackets. When a morph is cited as a primary entry, the morpheme for which it is an allomorph follows. Also listed under each entry are: the class (if any); a gloss or explanatory tag; and a number reference to the pertinent section of the grammar.

Items are ordered as follows: a b c ć d e h i j k ḱ l m n o p ṕ s t ť u w y ʔ I H æ ɦ ' N R r X ∅

á	{á}	hortatory aspect	734.3
a	{'æ}	indicative mode	732.3
ano	{ano}	second person with verbs	731
b	{b}	optative mode	734.1
bós	((bós))	completive	725
cy	{cy}	plural with nouns	632
ćo	{ćo}	dual with nouns	631
ćo	{ćo}	dual with nouns	631
{ćój}	((ćój))	quotative	726
{ćýj}	((bós))	unable	725
{di}	nN1	locative case	644.3
{dój}	((bós))	inchoative	725
{dom}		-ing	739.3
é	{á}	hortatory aspect	734.3
hR	{R}	somewhat	653.1
{jaťán}	((wet))	having previously	739.2
{jo}	((ʔus))	plural objects; repetitive actions	722
{k}		neutral aspect	732.1
{ký}	((ćój))	seems to me	726
{ky}		agentive	612
kylók	{kylé}	woman	611.2
{kyʔým}		remote aspect	741.1

ǩade {ǩade}	interrogative mode	735
ǩan nN1 {ǩan}	comitative case	644.1
ǩe {ǩe}	subjunctive mode	733
m {n}	third person with verbs	731
{má}	future	732.2
{ma}	what, that which, where	410.2
my.ˊ {mý} pP	that one	620
{myni} ((myni))	if, etc.	739.1
n {n}	third person with verbs	731
nak f̲ na {nak} nN1	allative case	644.4
{nan} nN1	ablative case	644.5
{ni} nN1	instrumental case	644.2
nim {ano}	second person with verbs	731
{no} nN1	linear distributive case	644.7
nono {cy}	plural with nouns	632
{nú} ((bós))	durative	725
nHʔH {ano}	second person with verbs	731
{padá}	imperative II	736.1
{paʔaje}	ancient or mythical time	738
{pe}	having the (momentary) quality of	653
peʔe {ńe}	plural with verbs	731
pi {pi}	imperative I	736.1
pi f̲ p {pi}	imperative I	736.1
pyʔy {ńa}	dual with verbs	731
s {s}	first person with verbs	731
{sa}	having the (permanent) quality of	653
sa {ć́o}	dual with pronouns	631
se {cy}	plural with pronouns	632
sí {s}	first person with verbs	731
sý {cy}	plural with nouns	632
{syʔýj}	q.v.	741.3
t {b}	optative mode	734.3
{te} nN1	indefinite locative case	644.6
{tí} ((bós))	for the sake of	725
{ti}	causative	721
{to} ((ʔus))	q.v.	722
{totó} ((ʔus))	reciprocal	722
ťyťy {ťyťy}	plural diminutive with nouns	632
{ús}	habitual aspect	732.3
{wet} ((wet))	as soon as, etc.	739.2
{wéw} ((ć́ój))	evidential	726

{wonó}	long ago	613, 737
y {y?y}	monitive aspect	734.1
y?y f ~ y {y?y}	monitive aspect	734.1
{?}	past tense	732.3
{?así}	q.v.	741.4
{?us} ((?us))	reflexive	722
{?usán}	q.v.	741.4
I {I}	object case	642
{Ibe}	diminutive	611.2
Iću {ću}	dual with nouns	631
Ik f ~ Iki {Ik}	possessive case	643
Ikan {kan} nN1	comitative case	644.1
Im {Im_1}	subject case	641
{Im_2}	attributive	651 ff.
æ {æ}	intentive aspect	734.2
ha {ha}	dual with verbs	731
he {he}	plural with verbs	731
'æ {'æ}	indicative mode	732.1
'æm {'æ}	indicative mode	732.1
{'Í}	singular with verbs	731
'In {n} MLA	downhill	723
'It {n} MLA	downhill	723
R {tyty}	plural diminutive with {tibí}	632
R {R}	somewhat	653.1
{Rto}	distributive	611
{r}	extremely	653.1
X {Im_1}	subject case	641
Xsa f ~ Xsaw {ću}	dual with pronouns	631
Xse {cy}	plural with pronouns	632
∅ {ano}	second person with verbs	731
∅ {b}	optative mode	734.2
∅ {n}	third person with verbs	731
∅ {pi}	imperative I	736.1
∅ {s}	first person with verbs	731
∅ {I}	object case	642
∅ {æ}	intentive aspect	734.2

APPENDIX C

LIST OF CLASSES

In conformity with usage in the body of the grammar, a class which is named with one of its members is marked thus: (( )); other class symbols are unmarked and are written with mnemonic letters, for example, N for noun, V for verb, etc. Class symbols which begin with small letters indicate bound classes, for example, aAd = adjectival stems, while Ad = inherent adjectives as free forms. Items are ordered alphabetically, but with all (( )) classes listed first.

((bós))	aspectual elements	725
((ćój))	q.v.	726
((myni))	dependent class markers	739.1
((né))	class of kinship stems	611.1
((wet))	q.v.	739.2
((ʔus))	q.v.	722
AA	adverbial absolutes	842
aAd	adjectival stems	652
Ad	inherent adjectives	652
AN	attributive nouns	654
C	connectives	810
CL	clauses	930
CLd	dependent clauses	930
CLf	finite clauses	930
CPH	connective phrases	941
D	demonstratives	651
EM	emphasis marker	830
GPH	general phrases	943
HF	hesitation forms	820
I	interjections	850
IPH	interjectory phrases	942
L	locative nouns	400, 660, 900
MLA	motion-location auxiliaries	723

nN	noun expansions	660
nN1	class of locative case suffixes	644
NPH	noun phrases	944
O	object nouns	400, 660, 900
PH	phrases	940
Po	possessive nouns	400, 660, 900
pP	pronoun stems	620, 660
Q	derived adjectives	653
QW	question words	860
S	subject nouns	400, 660, 900
SEN	sentences	950
sS	substantive stems	660
ST	class of multivalent stems	611
TA	temporal absolutes	841
V	verbs	920
Vc	VT {dom}	750
Vd	dependent verbs	750
Vk	verbs with {ka.ˀ}	750
VT	verb themes	750
vV	expanded verbs	750